Preacher curl plan

Here you are given a plan for making a Preacher curl, which can also be found under the name Preacher bench. Whether you are a fitness expert or someone who just enjoys keeping in shape, doing preacher curls not only activates and strengthens a large number of your arm muscles, but also contributes to your health in general. The preacher curl exercise targets the brachialis muscle located in the upper arm (aids the flexion of your elbow).

Guide:
1. Grab a dumbbell with each arm and place the upper arms on top of the preacher bench. This will be your starting position.
2. Slowly lower the dumbbells until your upper arm is extended and the biceps is fully stretched.
3. Use the biceps to curl the weights up until your biceps is fully contracted
4. Inhale as you lower the dumbbell. Exhale as you curl the dumbbell to the starting position.
Repeat for the recommended amount of repetitions.

Key features_
- Target muscles: strengthen your brachialis, biceps brachii and brachioradialis
- exercise could also be done with a pair of dumbbells, barbells or with an e-z bar.
- adjustable arm platform, so you can raise or lower it

If you decide to make this preacher curl, you should padded the seat and declined sheet (platform), so you could rest your arms with comfort.

Sub-assembly list

Item Number	Title	Quantity
1	Preacher Curl	1
2	Weight Set	1

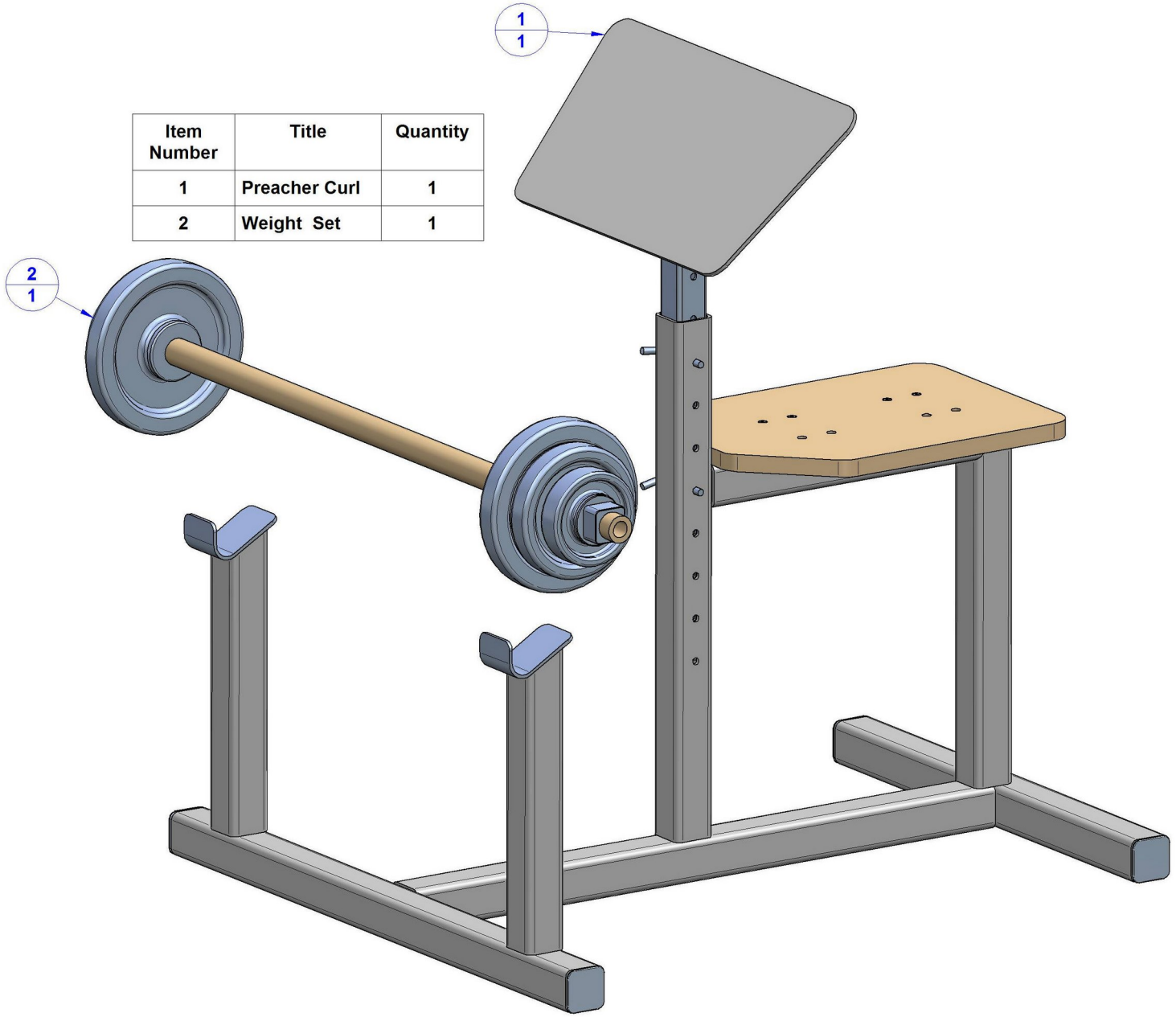

1. Preacher Curl Sub-assembly – Parts List and 2D Documentation

Item Number	Title	Material	Quantity	Category	Cut Length
1	SQUARE TUBING 50x50x4	Steel	1		790,00 mm
2	SQUARE TUBING 50x50x4	Steel	1		600,00 mm
3	SQUARE TUBING 50x50x4	Steel	1		800,00 mm
4	SQUARE TUBING 50x50x4	Steel	1		410,00 mm
5	SQUARE TUBING 50x50x4	Steel	1		610,00 mm
6	SQUARE TUBING 50x50x4	Steel	1		435,00 mm
7	SQUARE TUBING 50x50x4	Steel	2		360,00 mm
8	SQUARE TUBING 40x40x2.9	Steel	1		620,00mm
9	Declination Sheet	Steel	1		
10	Seat	wood	1		
11	Sheet Support	Steel	4		
12	Triangle support	Steel	4		
13	Slotted pan head screw M5x30	Steel	8	Standard Part	
14	Spring lock washer	Steel	8	Standard Part	
15	Hexagon nut M5	Steel	8	Standard Part	
16	Pin D8mm	Steel	2		
17	Dumbbell Set Holder	Steel	2		
18	Cover 50x50mm	Steel	4		

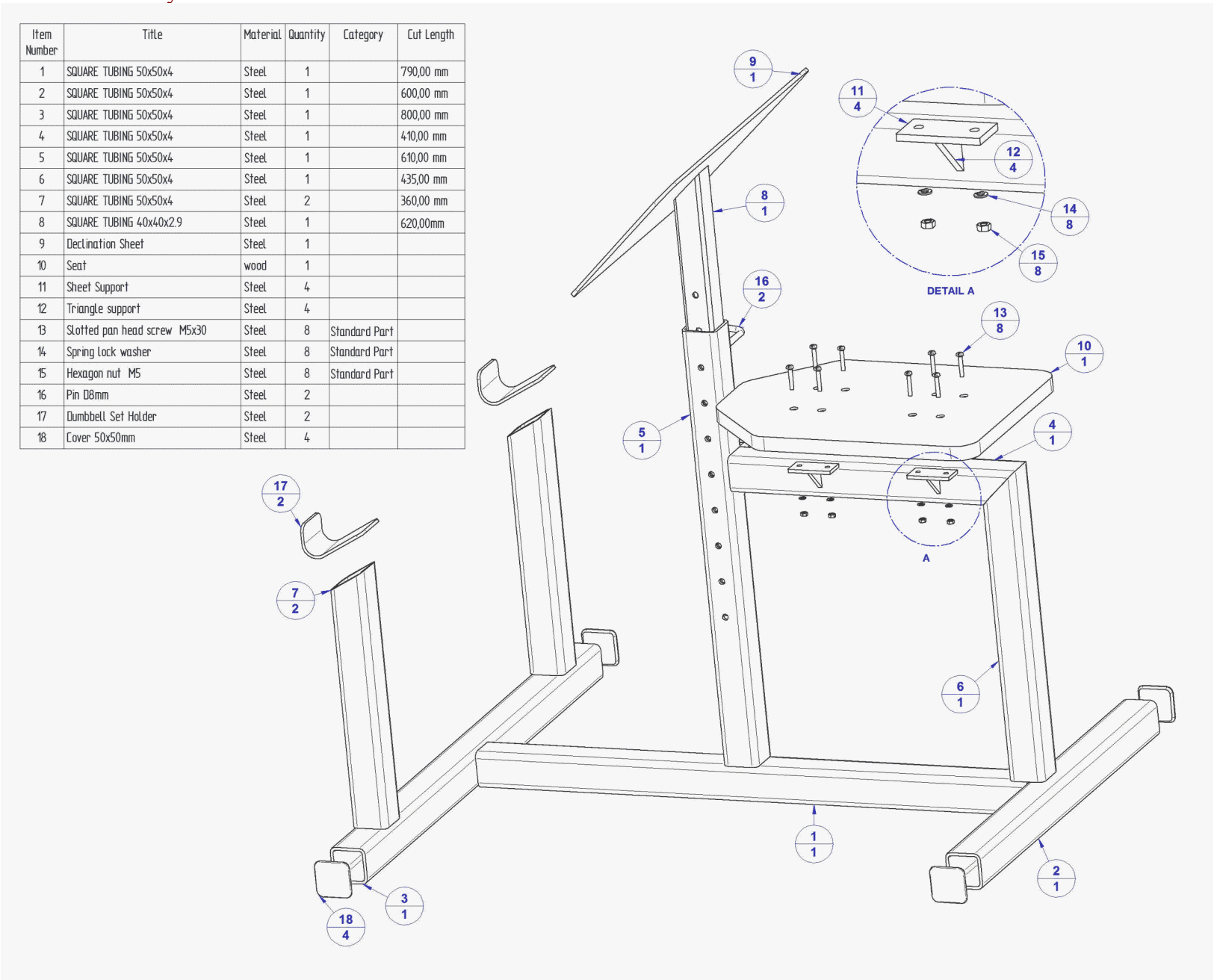

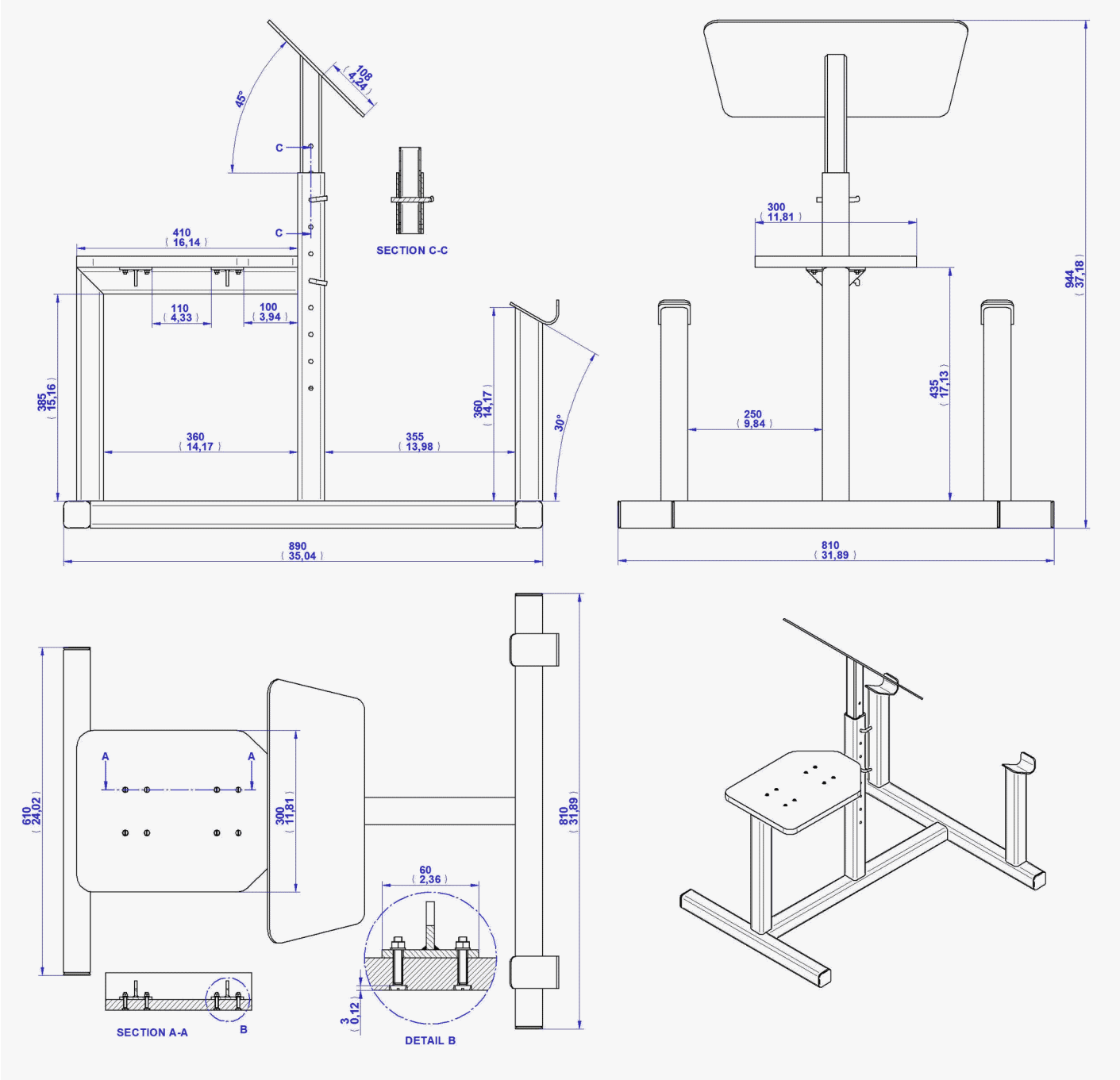
45°
108
4,44
C
C
410
16,14
SECTION C-C
110
4,33
100
3,94
385
15,16
360
14,17
355
13,98
360
14,17
30°
890
35,04
300
11,81
944
37,18
435
17,13
250
9,84
810
31,89
610
24,02
A
A
300
11,81
810
31,89
60
2,36
3
0,12
SECTION A-A
B
DETAIL B

Frame Components

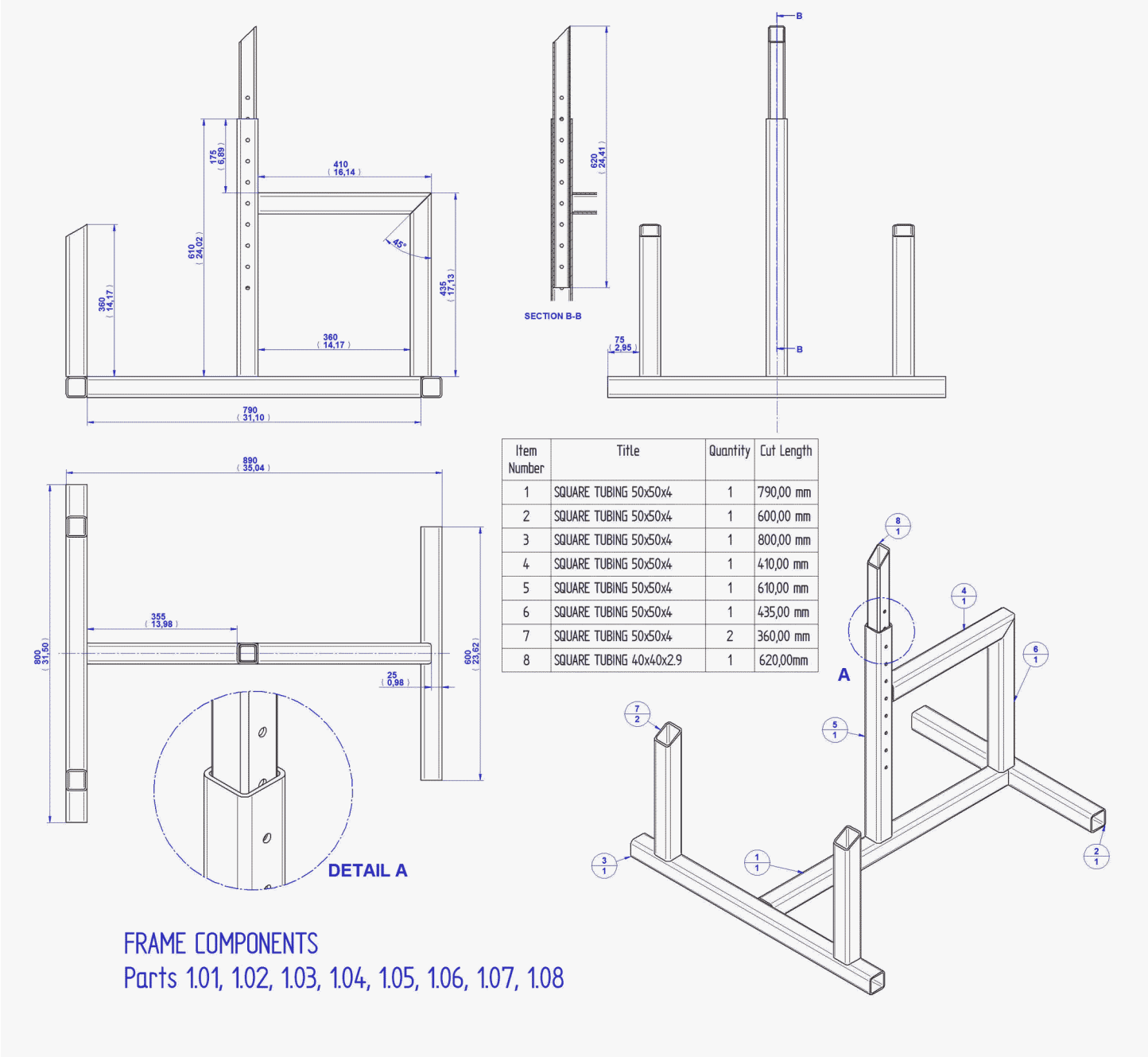

Item Number	Title	Quantity	Cut Length
1	SQUARE TUBING 50x50x4	1	790,00 mm
2	SQUARE TUBING 50x50x4	1	600,00 mm
3	SQUARE TUBING 50x50x4	1	800,00 mm
4	SQUARE TUBING 50x50x4	1	410,00 mm
5	SQUARE TUBING 50x50x4	1	610,00 mm
6	SQUARE TUBING 50x50x4	1	435,00 mm
7	SQUARE TUBING 50x50x4	2	360,00 mm
8	SQUARE TUBING 40x40x2.9	1	620,00mm

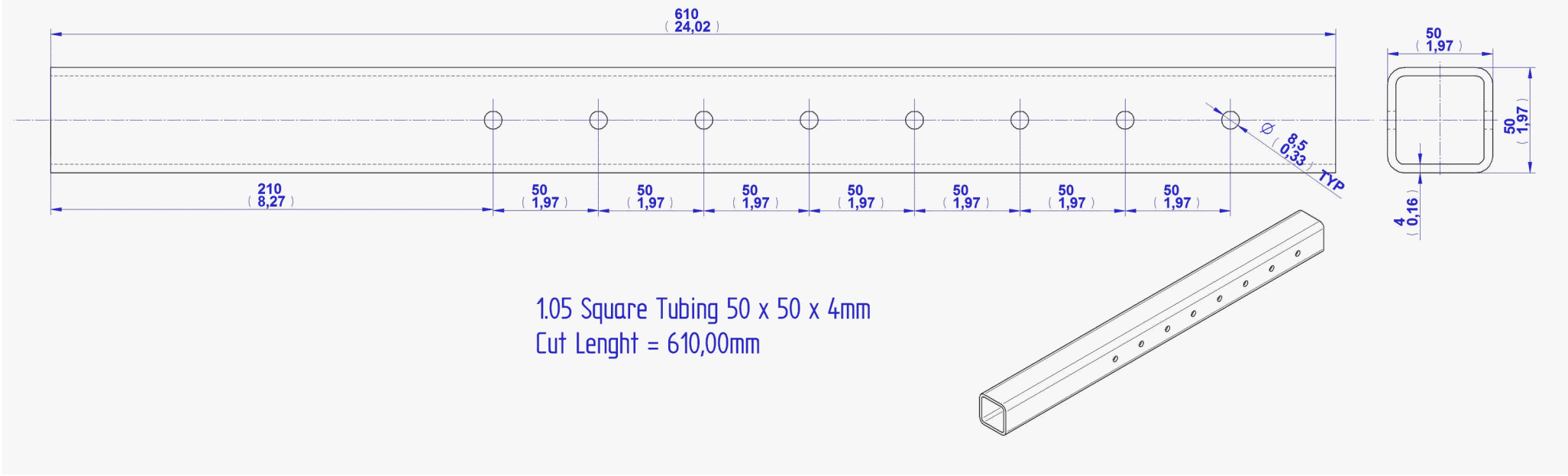

1.05 Square Tubing 50 x 50 x 4mm
Cut Lenght = 610,00mm

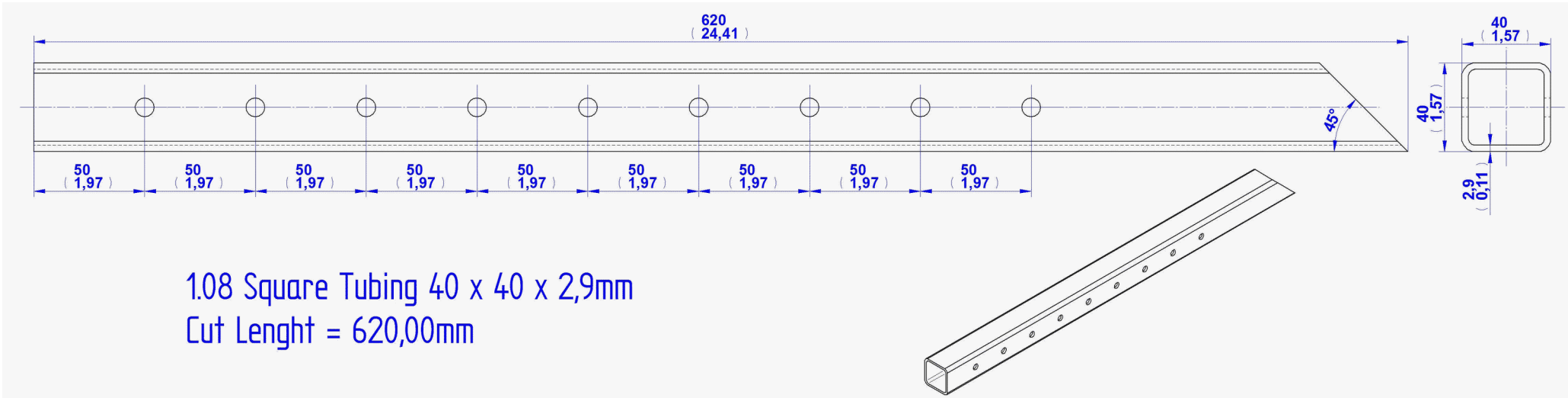

1.08 Square Tubing 40 x 40 x 2,9mm
Cut Lenght = 620,00mm

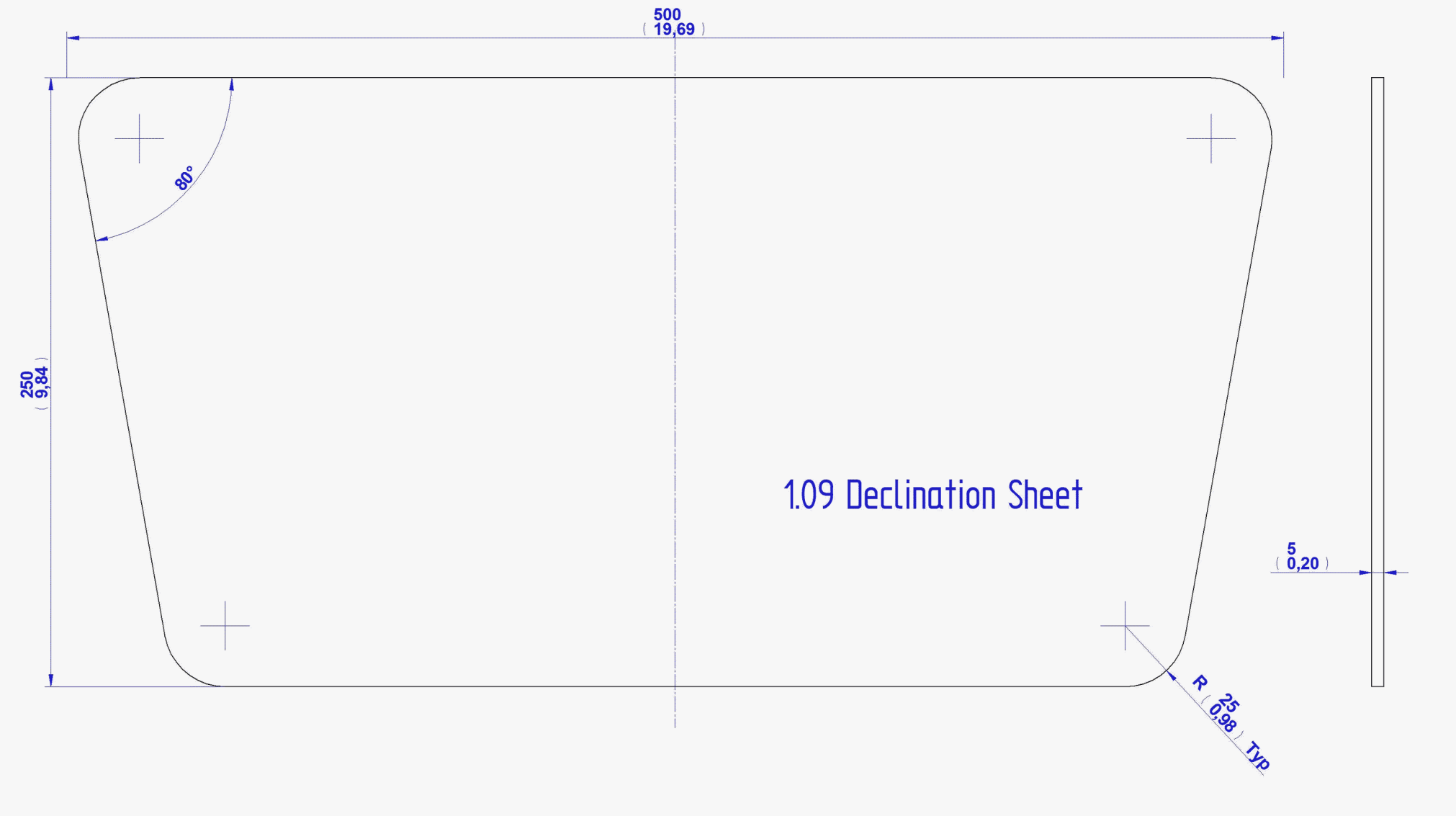
500
(19,69)
80°
250
(9,84)
1.09 Declination Sheet
5
(0,20)
R 25
(0,98) TYP

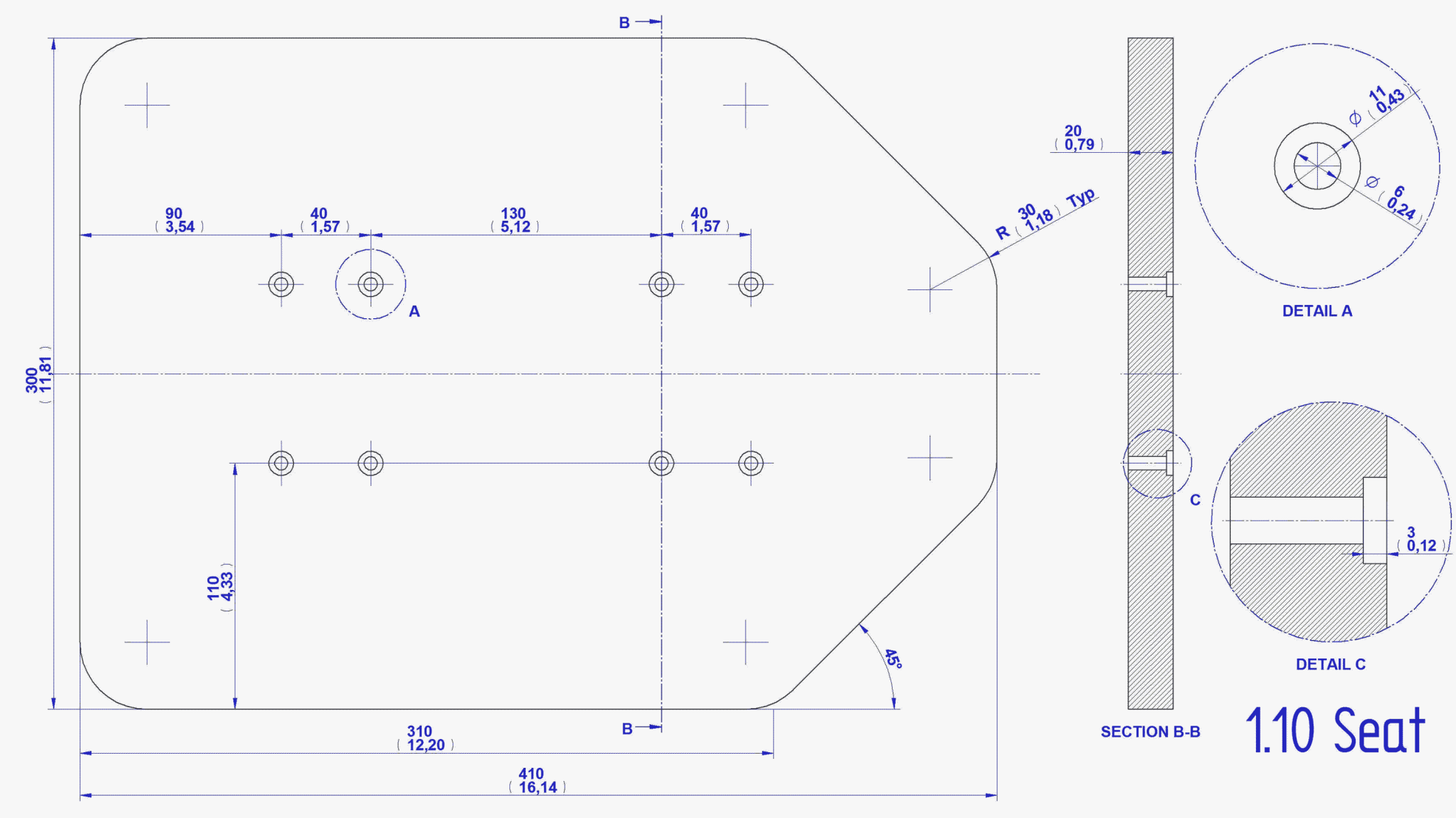
B
90
(3,54)
40
(1,57)
130
(5,12)
40
(1,57)
A
R 30 (1,18) Typ
300
(11,81)
110
(4,33)
45°
B
310
(12,20)
410
(16,14)
20
(0,79)
C
SECTION B-B
ϕ 11 (0,43)
ϕ 6 (0,24)
DETAIL A
3
(0,12)
DETAIL C
1.10 Seat

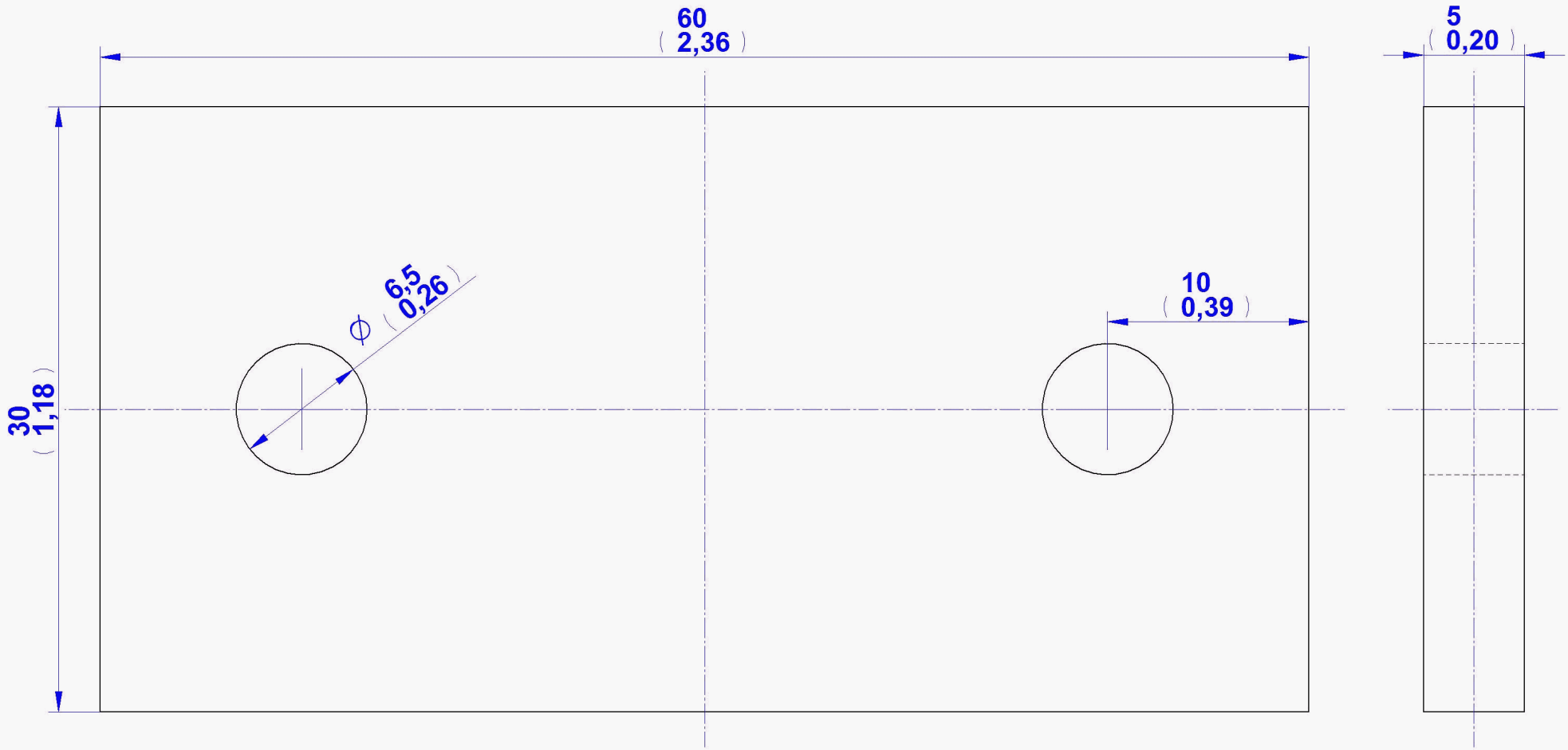

1.11 Sheet Support

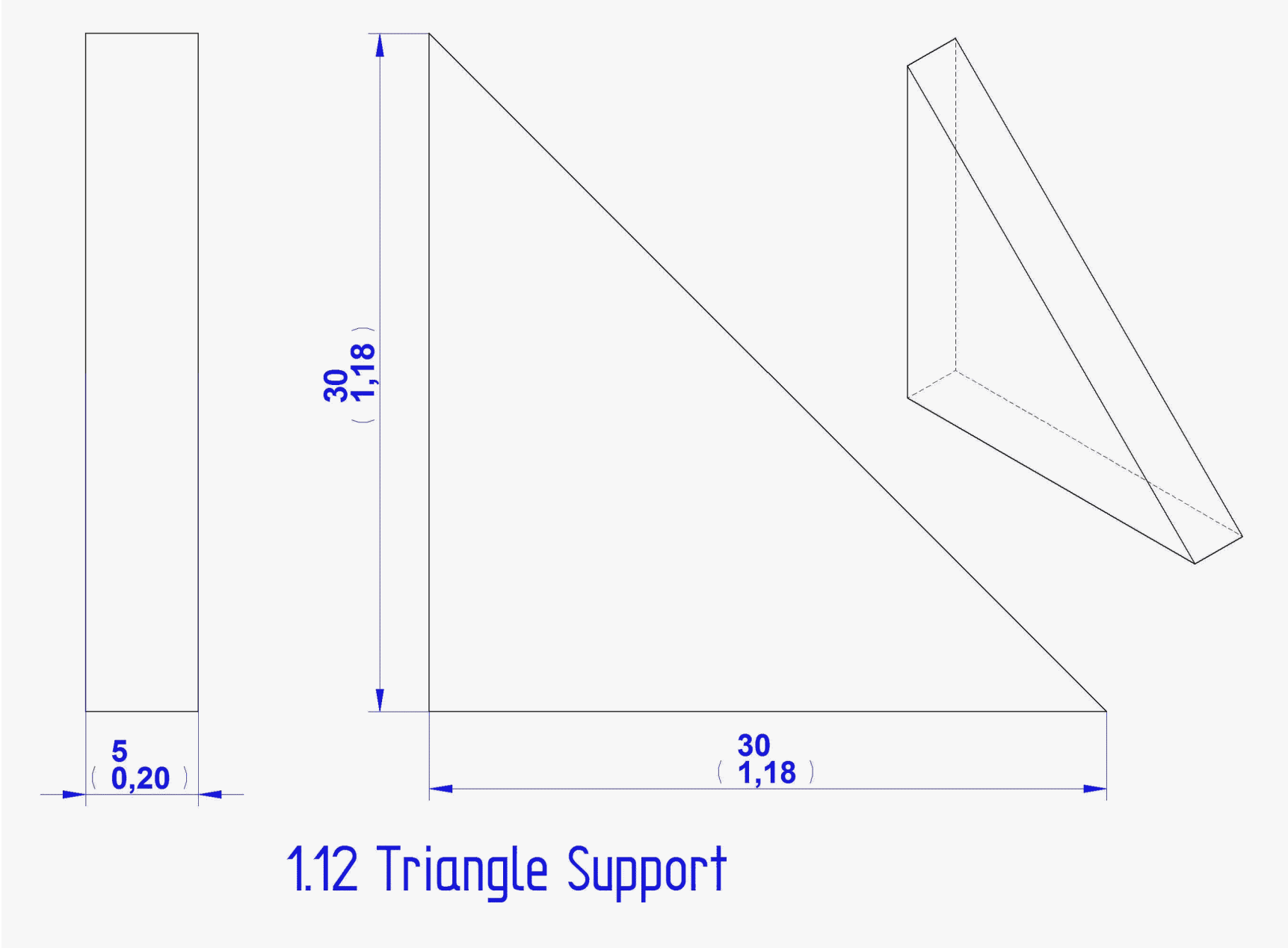

1.12 Triangle Support

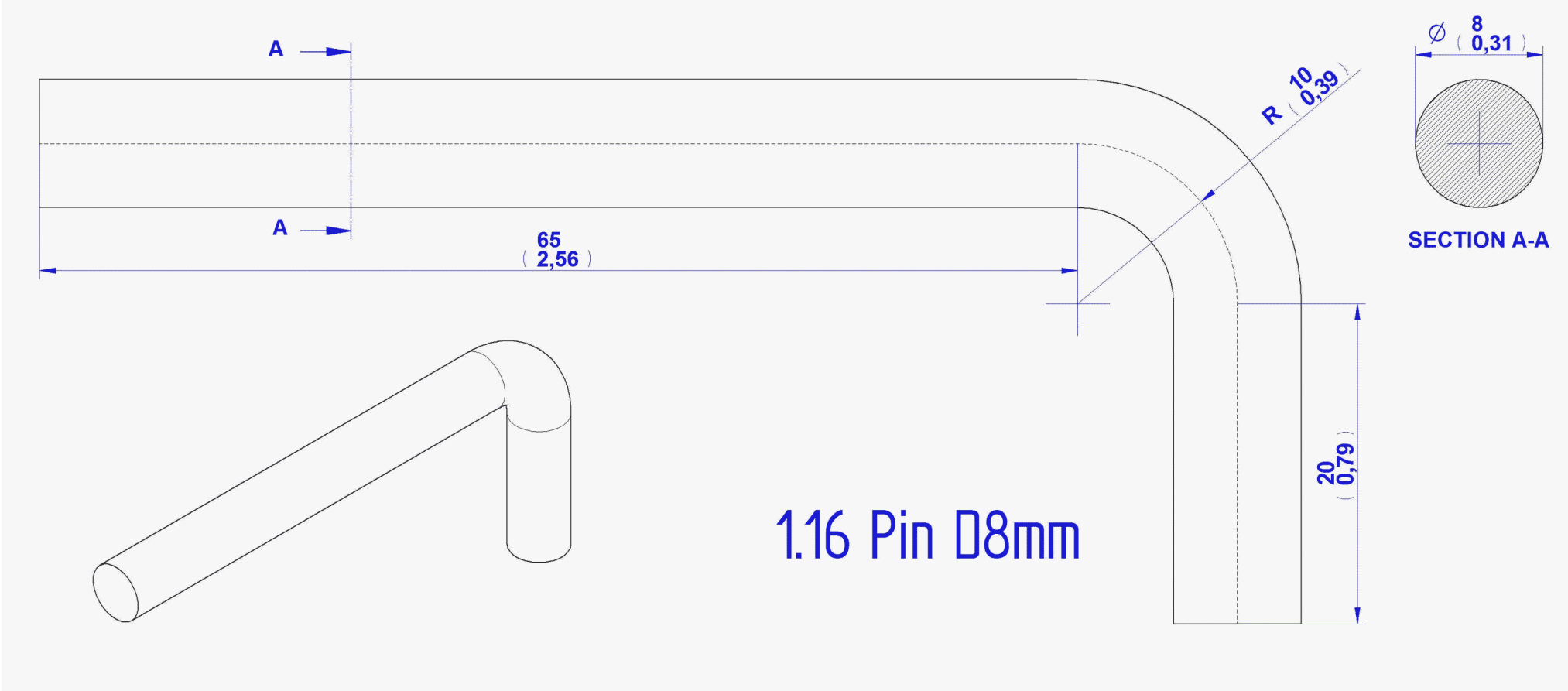
A
A
65
(2,56)
R 10
(0,39)
20
(0,79)
Ø 8
(0,31)
SECTION A-A
1.16 Pin D8mm

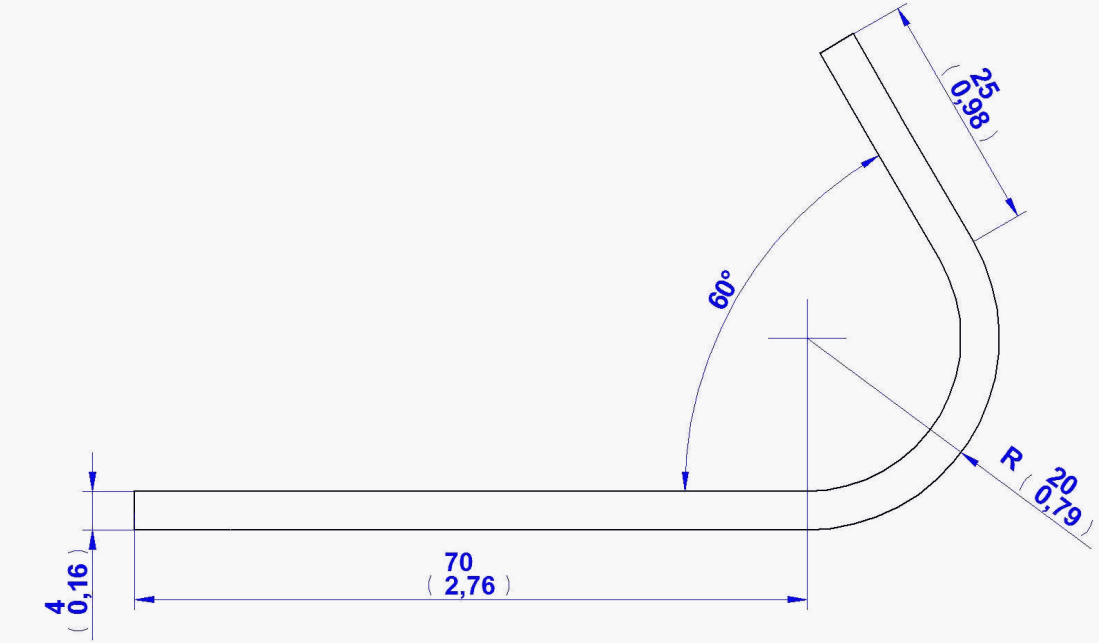

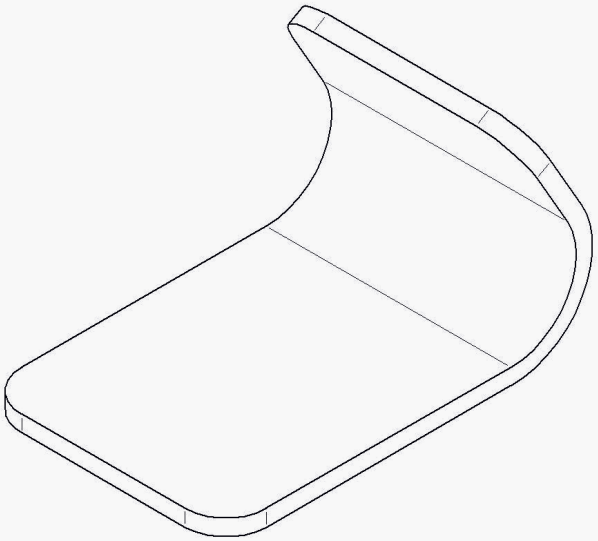

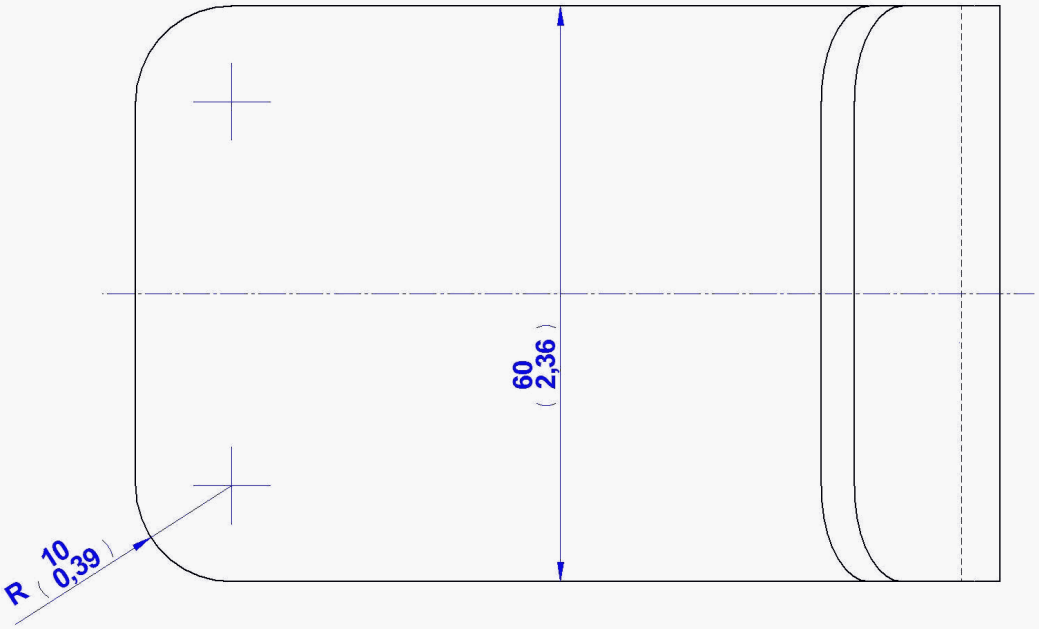

1.17 Dumbbell Set Holder

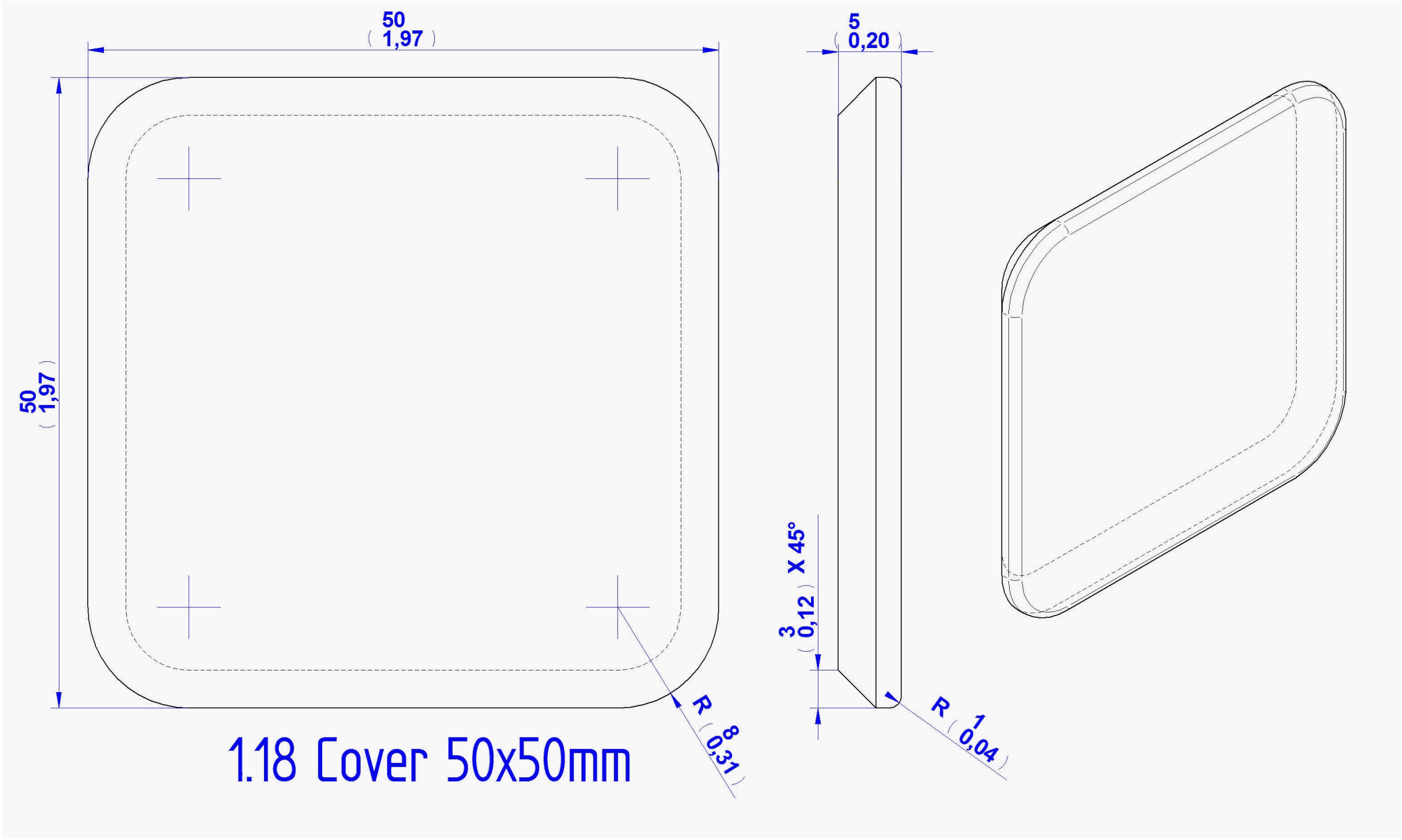

1.18 Cover 50x50mm

Standard Parts

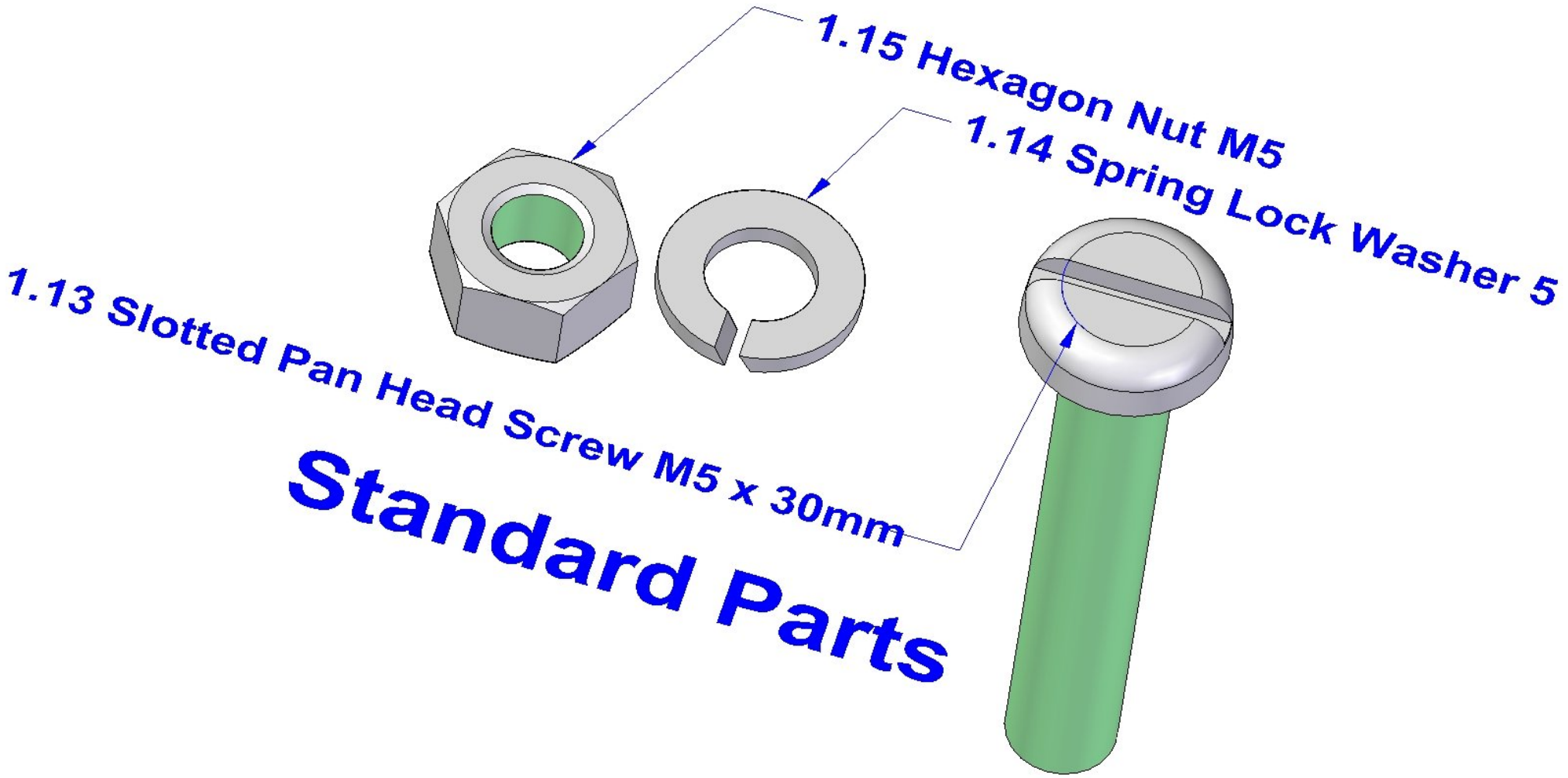

2. Weight Set Subassembly – Parts List and 2D Documentation

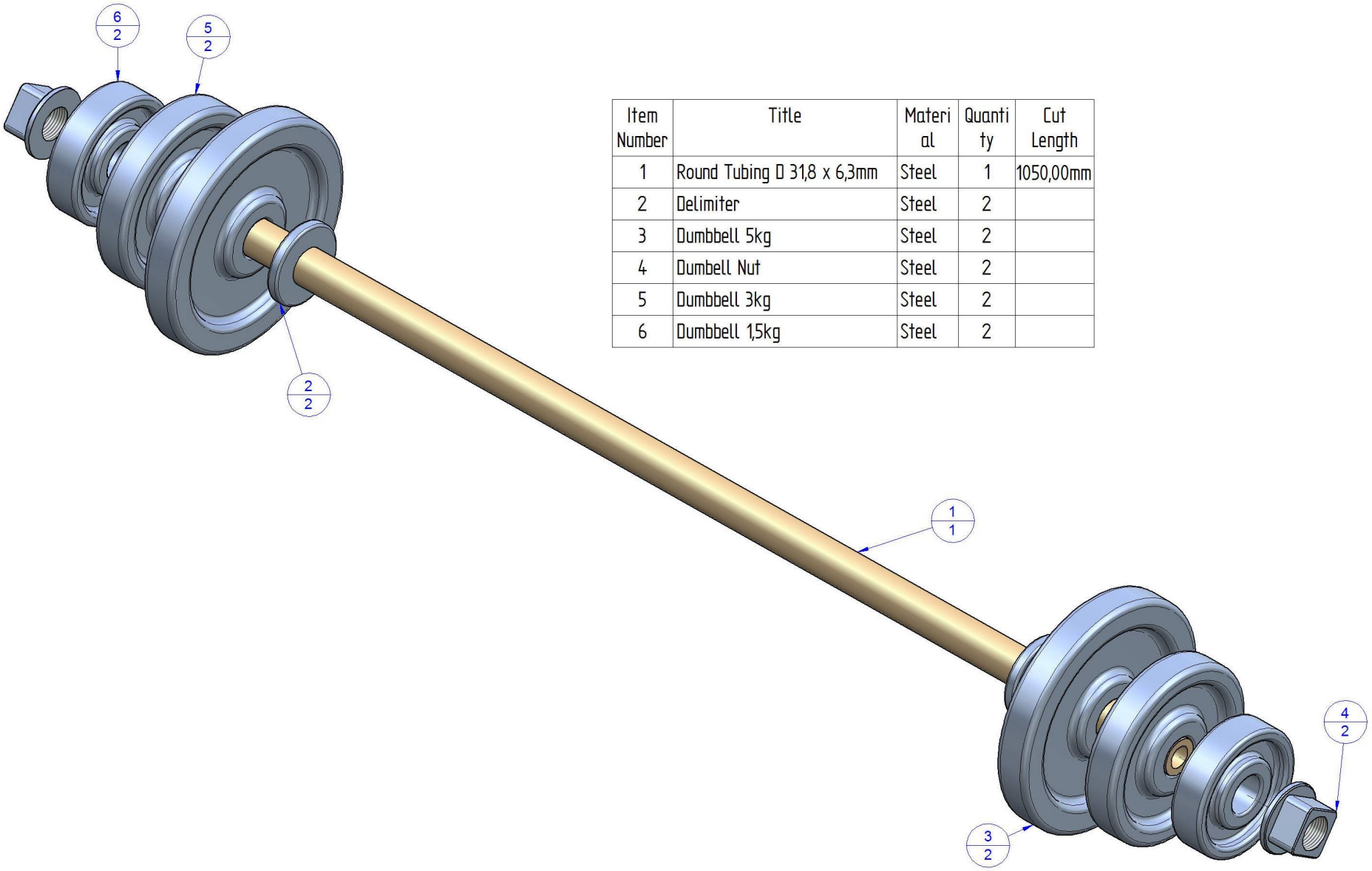

Item Number	Title	Material	Quantity	Cut Length
1	Round Tubing D 31,8 x 6,3mm	Steel	1	1050,00mm
2	Delimiter	Steel	2	
3	Dumbbell 5kg	Steel	2	
4	Dumbell Nut	Steel	2	
5	Dumbbell 3kg	Steel	2	
6	Dumbbell 1,5kg	Steel	2	

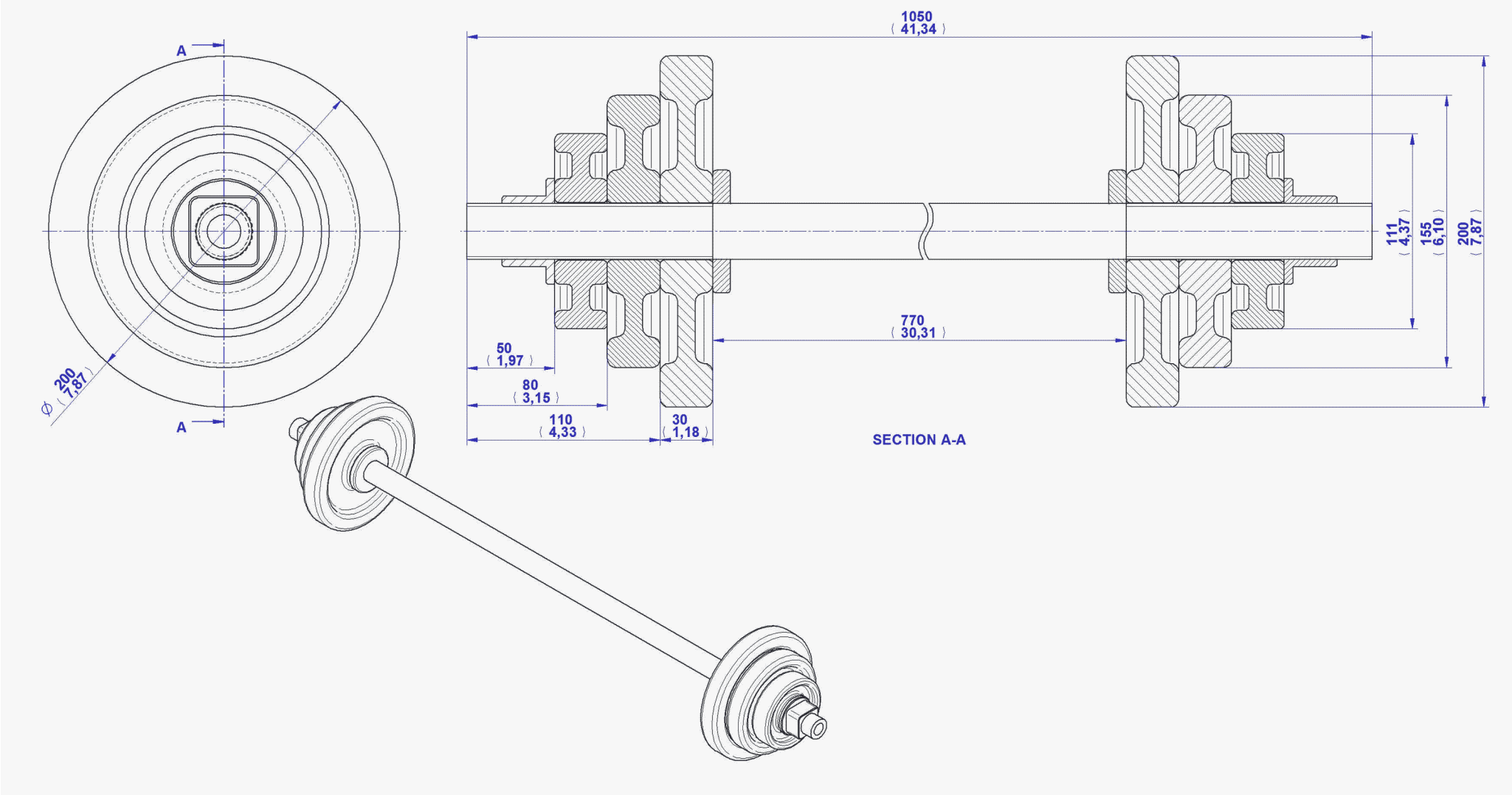
A
A
Ø 200 7,87
1050 41,34
770 30,31
50 1,97
80 3,15
110 4,33
30 1,18
111 4,37
155 6,10
200 7,87
SECTION A-A

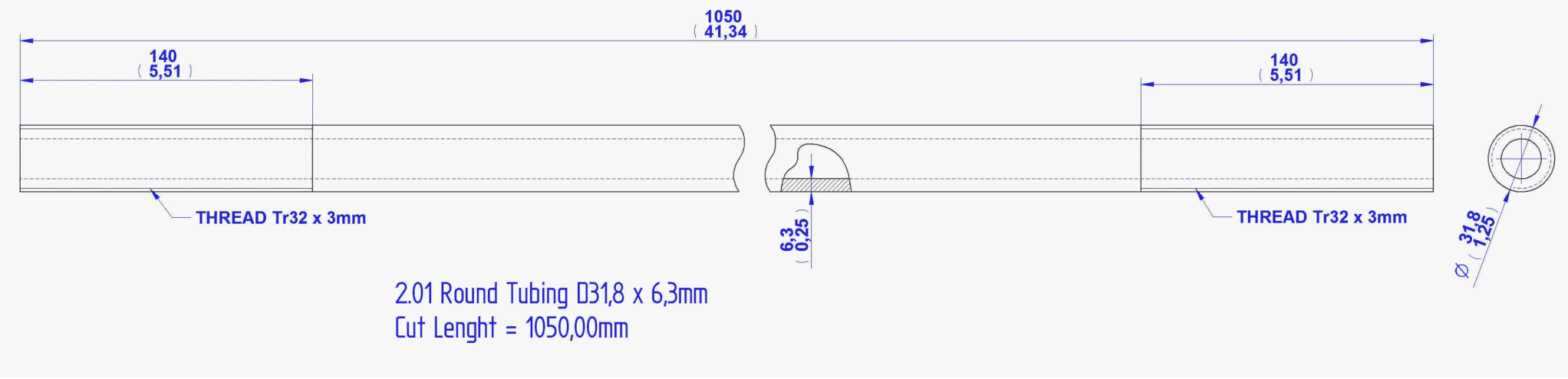
1050
(41,34)
140
(5,51)
140
(5,51)
THREAD Tr32 x 3mm
THREAD Tr32 x 3mm
6,3
(0,25)
Ø 31,8
(1,25)
2.01 Round Tubing D31,8 x 6,3mm
Cut Lenght = 1050,00mm

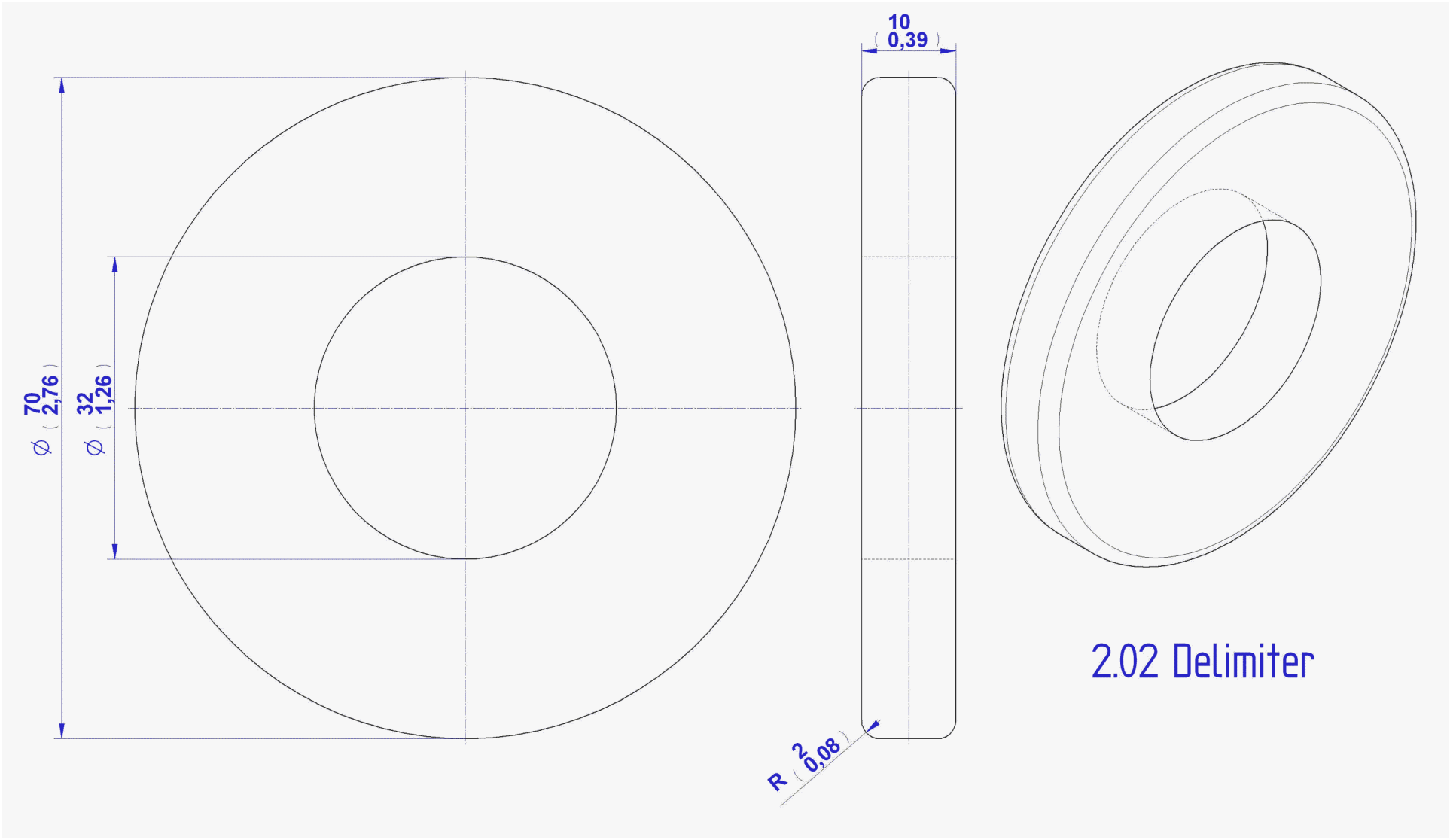
10
(0,39)
70
(2,76)
32
(1,26)
R 2
(0,08)
2.02 Delimiter

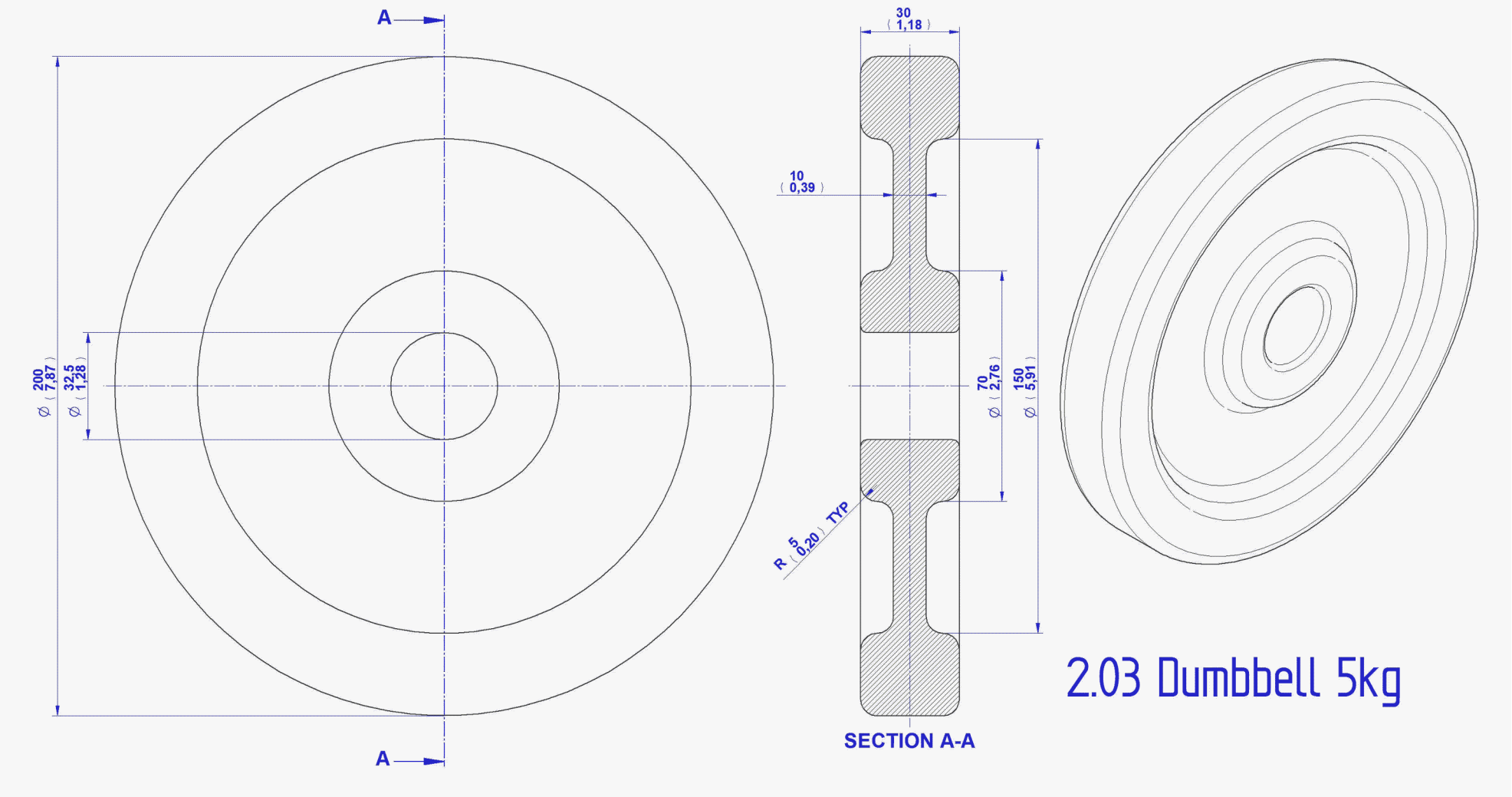
A
A
200
7,87
32,5
1,28
30
1,18
10
0,39
70
2,76
150
5,91
R 5
0,20
TYP
SECTION A-A
2.03 Dumbbell 5kg

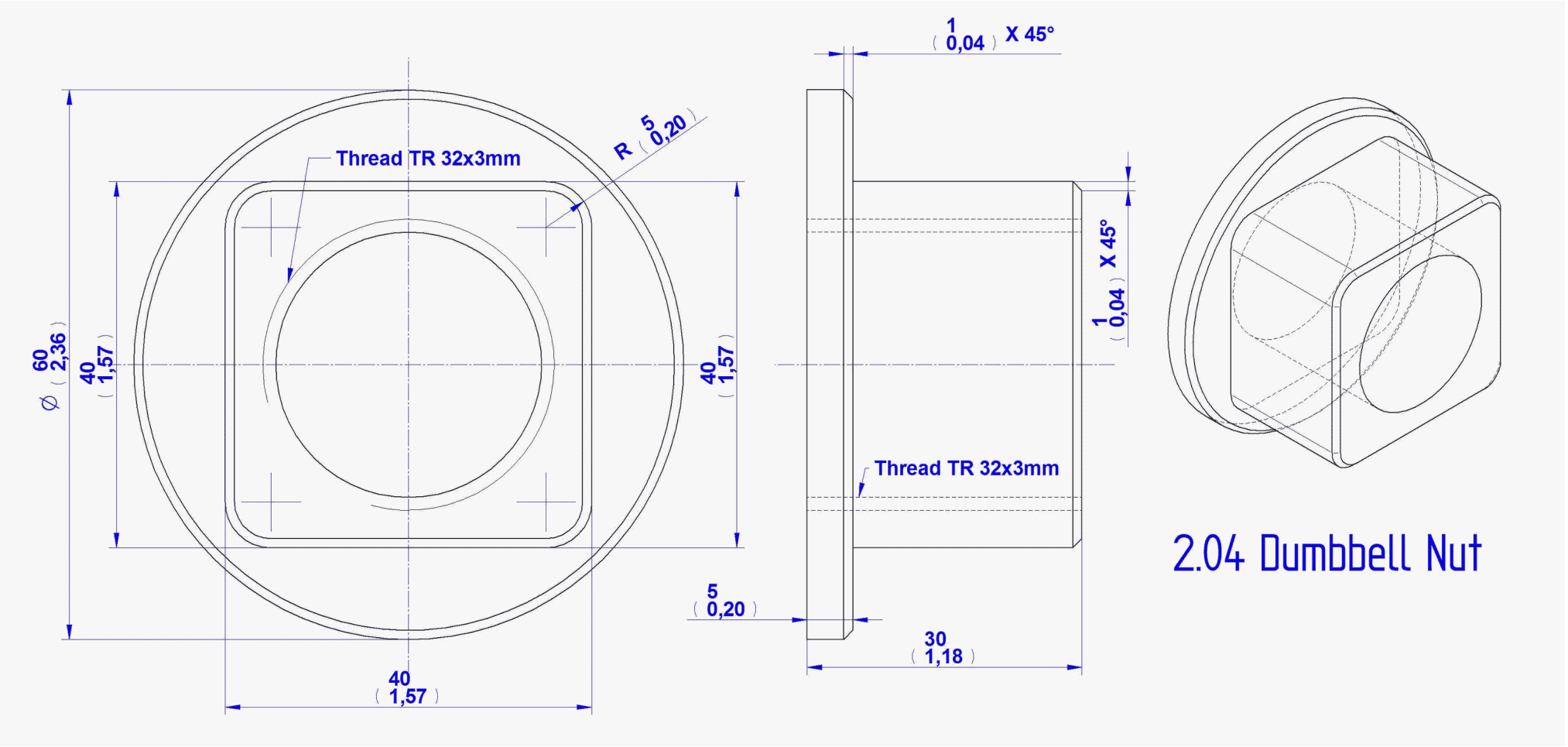
1
(0,04) X 45°
Thread TR 32x3mm
R 5 (0,20)
60 (2,36)
40 (1,57)
40 (1,57)
1 (0,04) X 45°
Thread TR 32x3mm
5 (0,20)
30 (1,18)
40 (1,57)
2.04 Dumbbell Nut

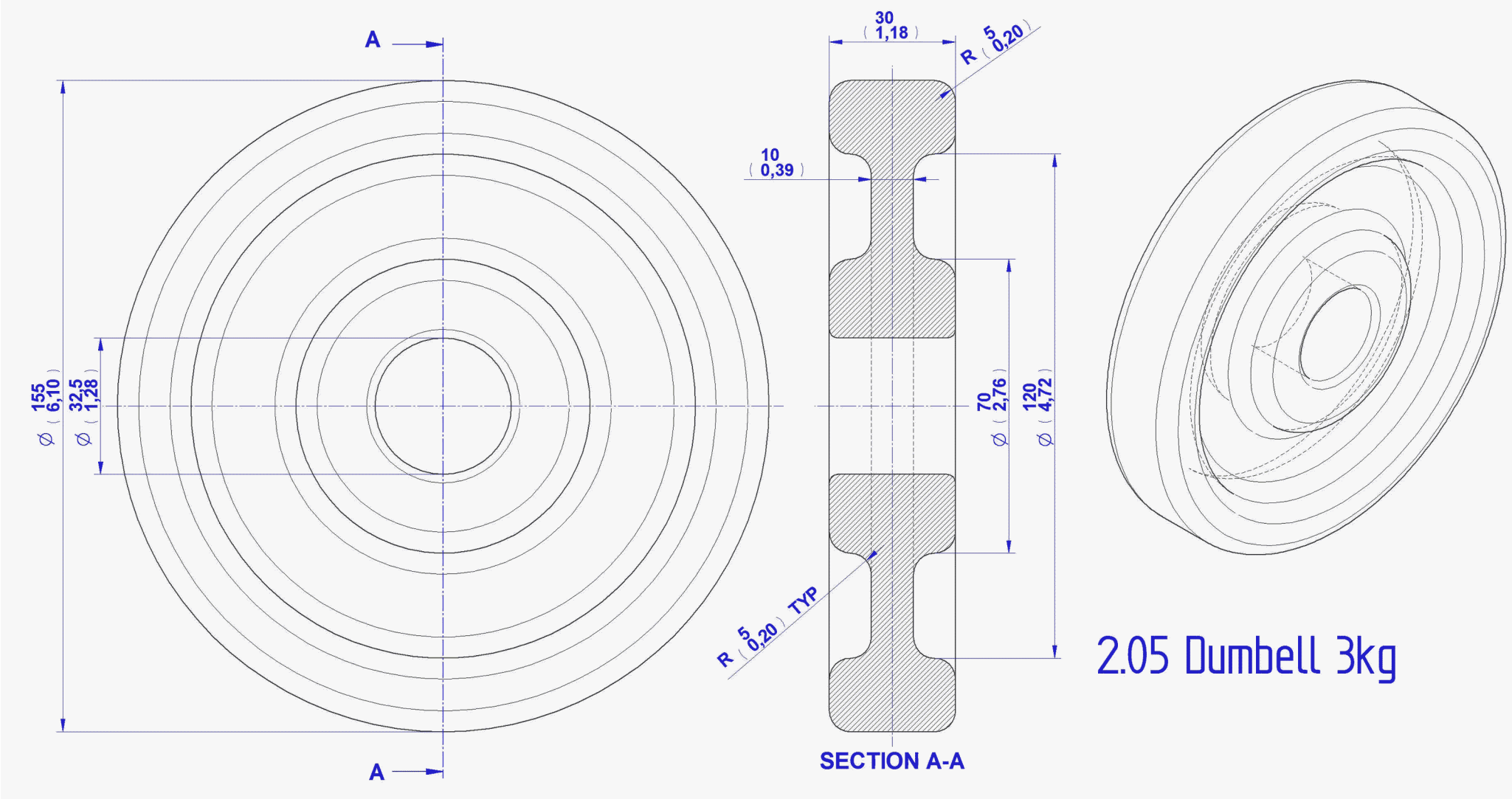
A
A
155
⌀ (6,10)
32,5
⌀ (1,28)
30
(1,18)
R 5
(0,20)
10
(0,39)
70
⌀ (2,76)
120
⌀ (4,72)
R 5
(0,20) TYP
SECTION A-A
2.05 Dumbell 3kg

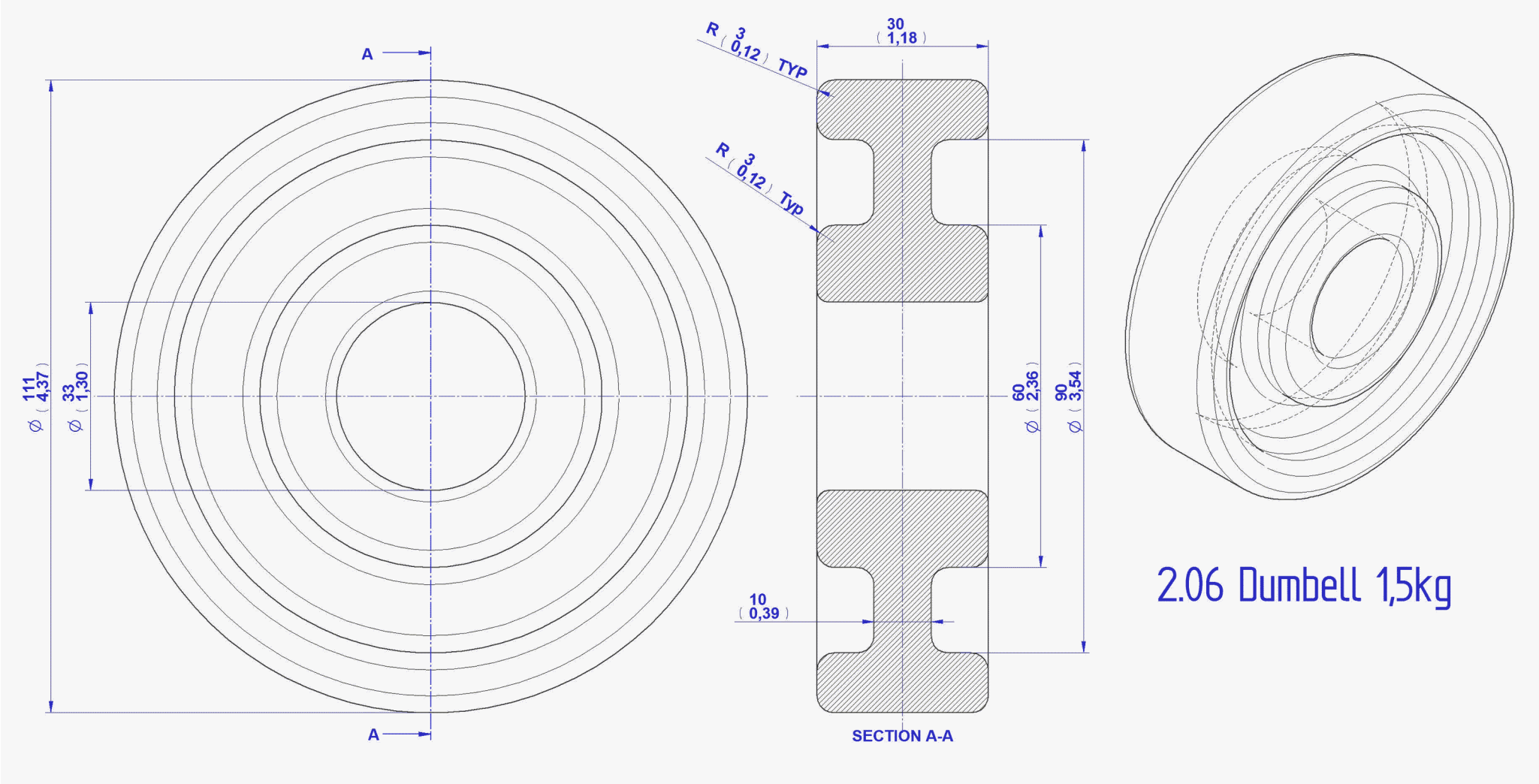
A
A
111
(4,37)
33
(1,30)
R 3
(0,12) TYP
R 3
(0,12) Typ
30
(1,18)
60
(2,36)
90
(3,54)
10
(0,39)
SECTION A-A
2.06 Dumbell 1,5kg

Assemblage Instruction

1. Preacher Curl Subassembly

1.

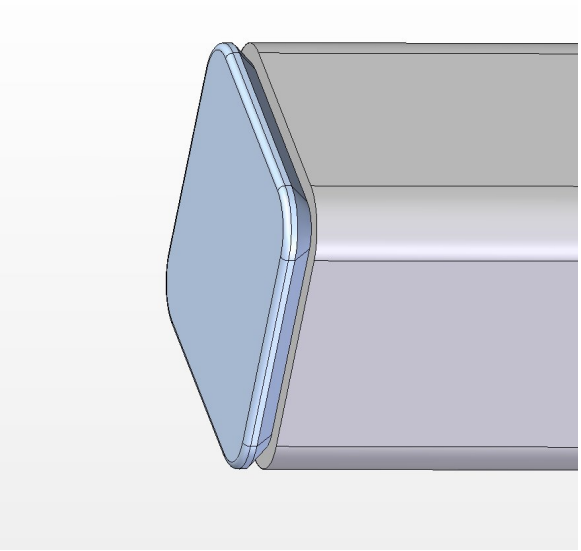

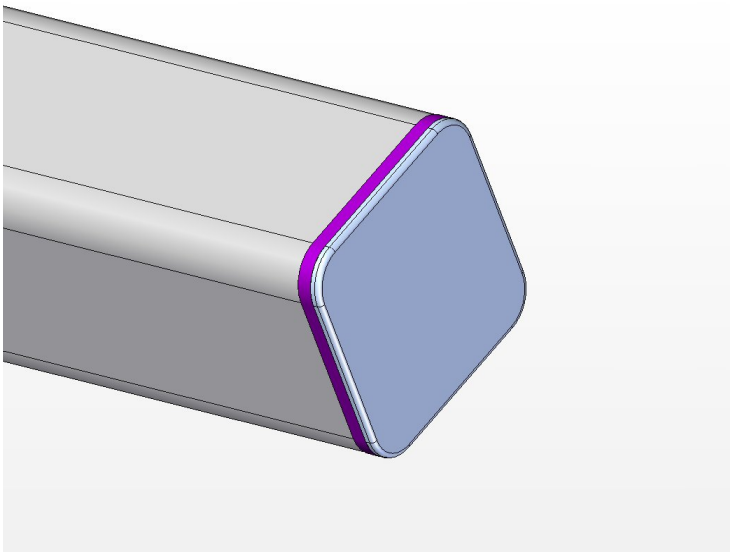

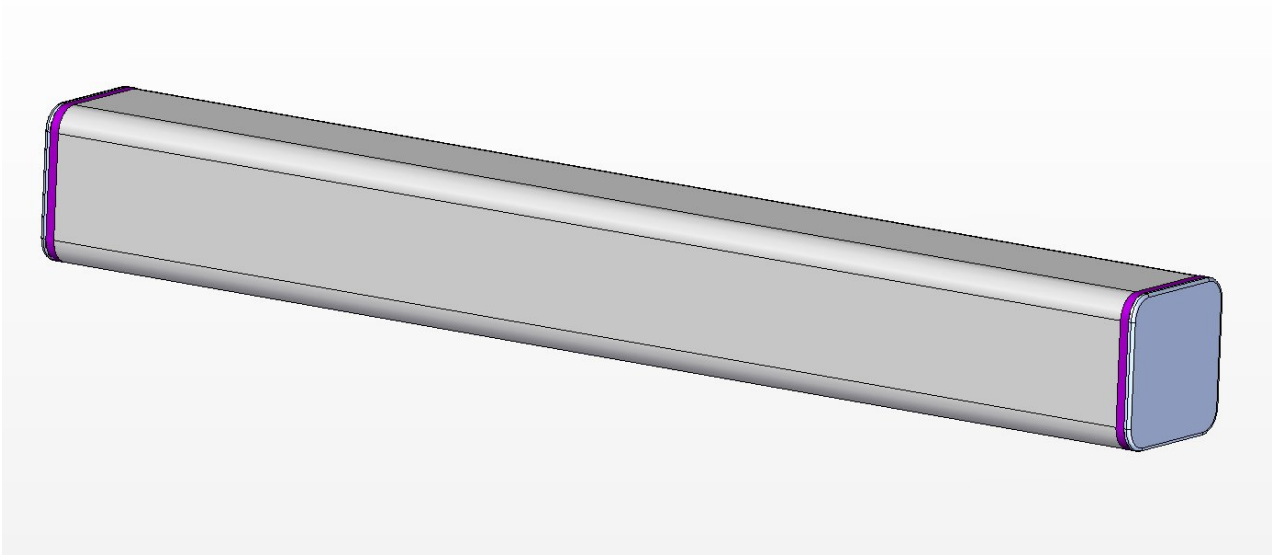

2.

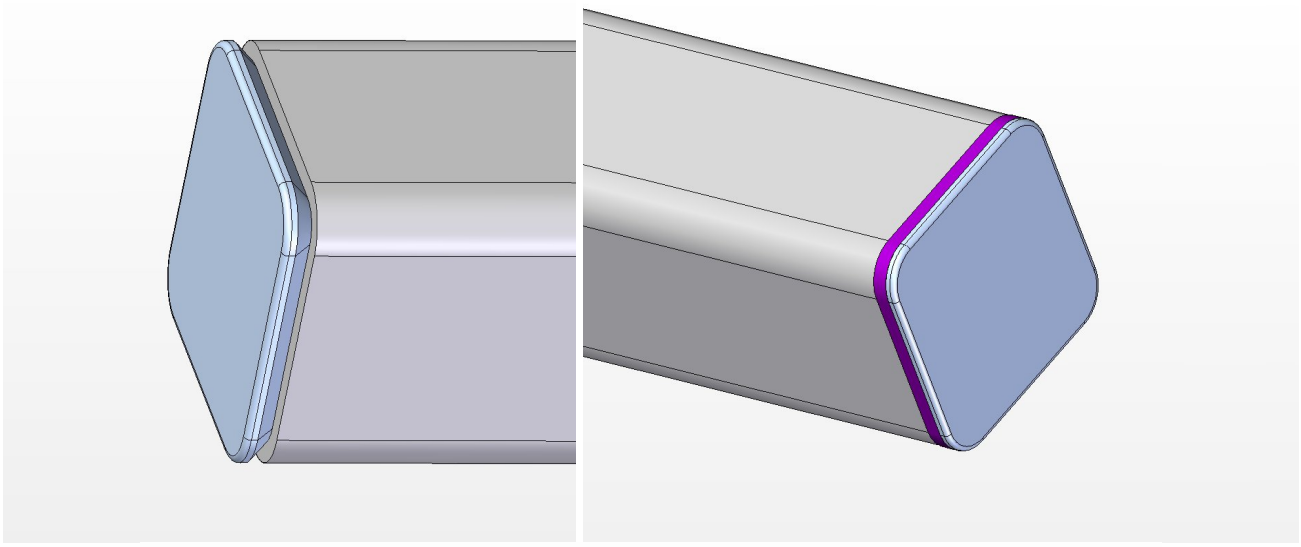

3.

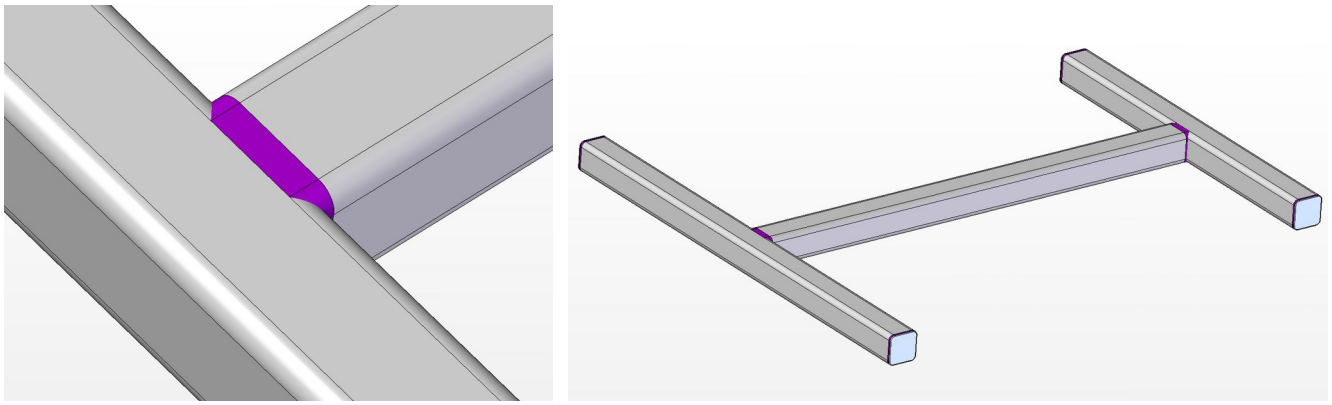

4.

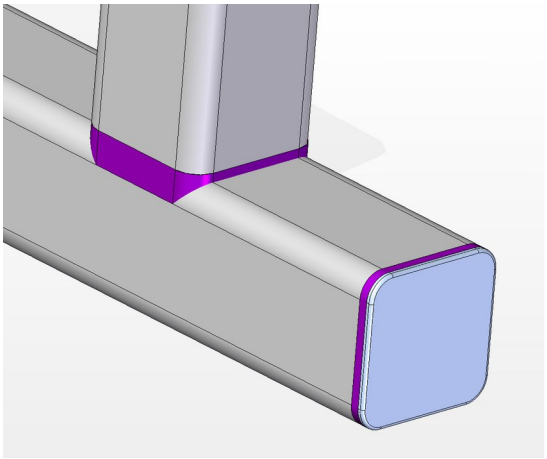

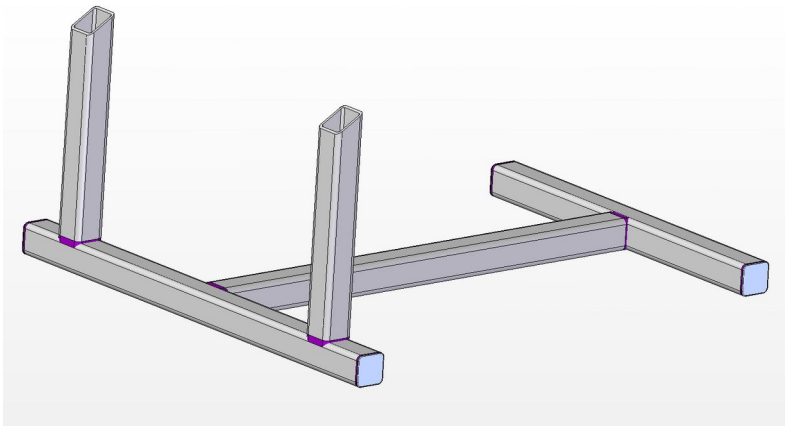

5.

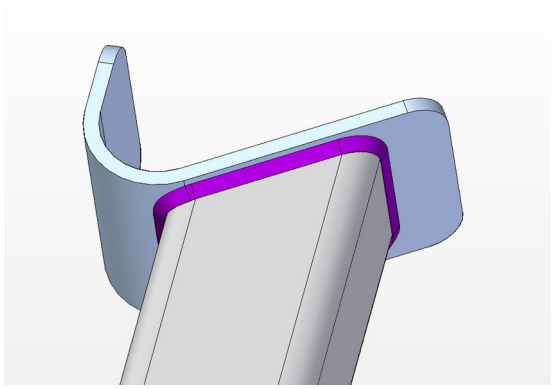

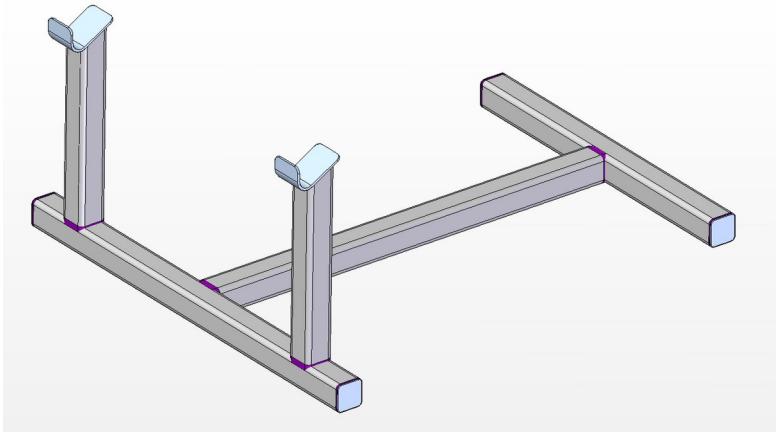

6.

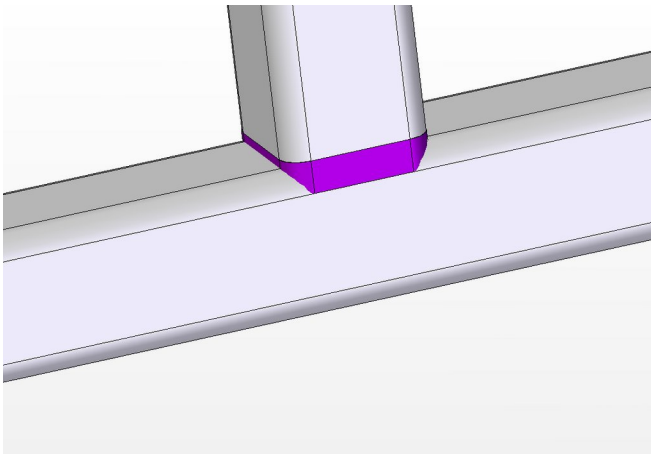

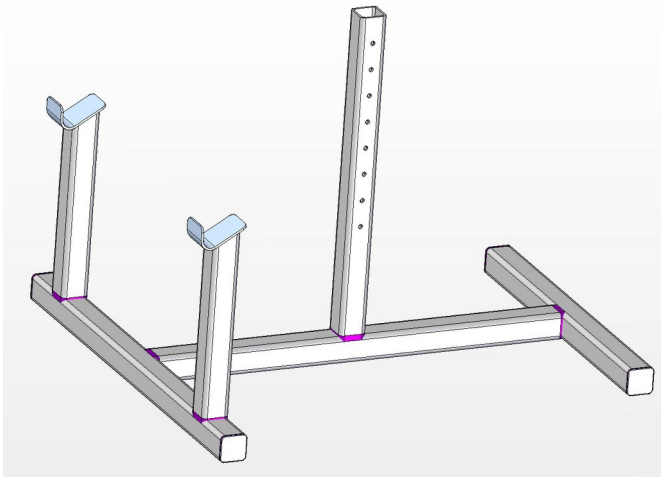

7.

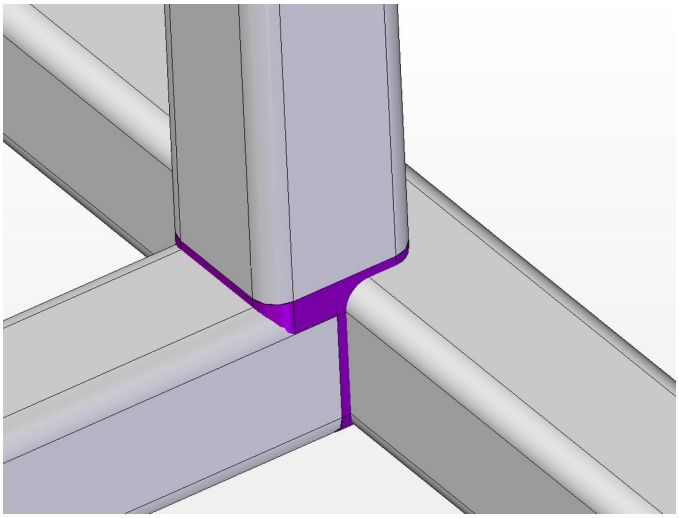

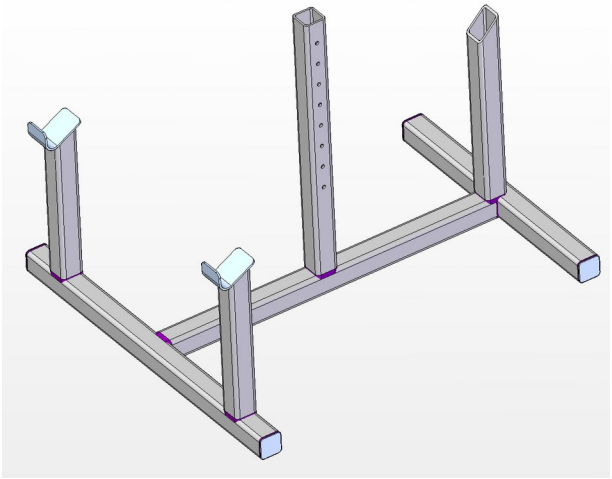

8.

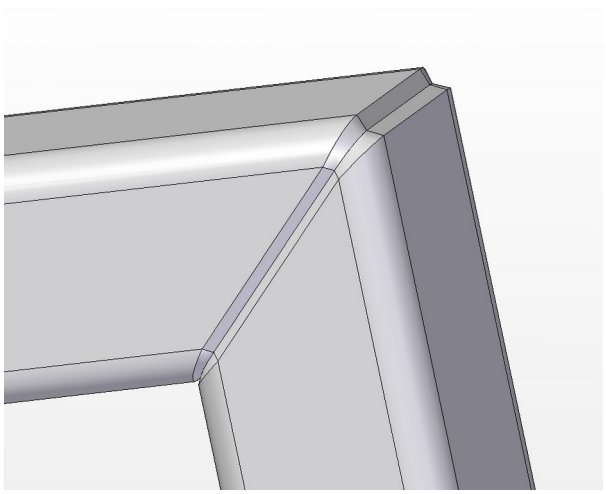

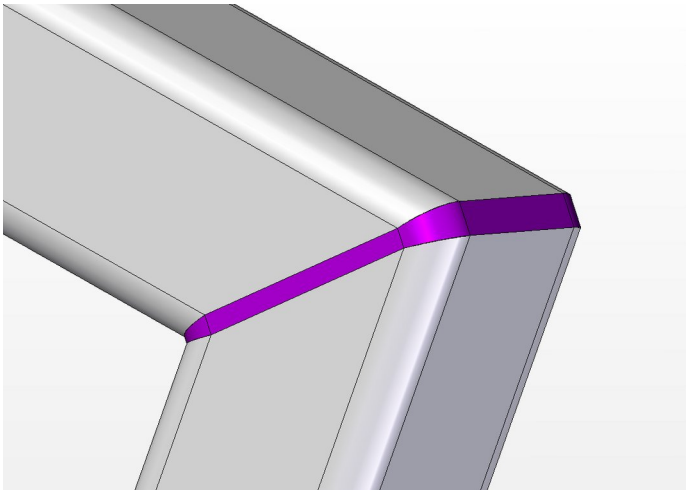

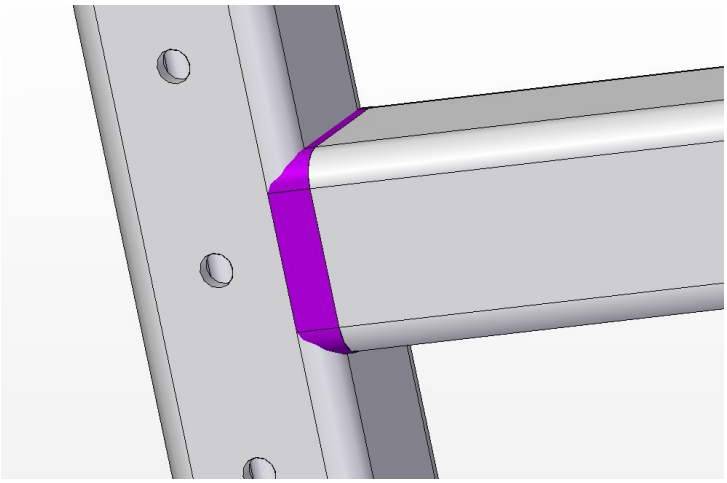

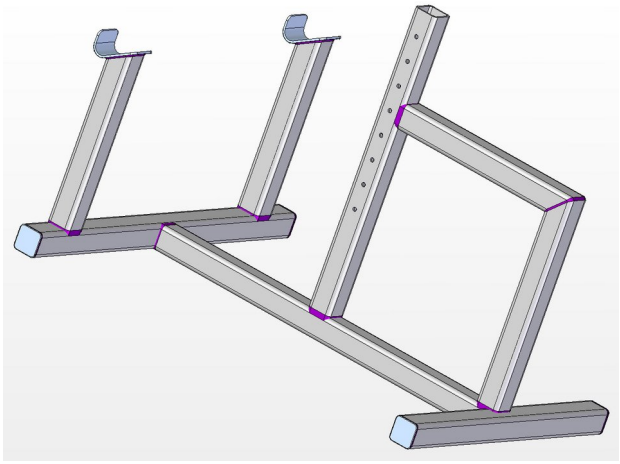

9.

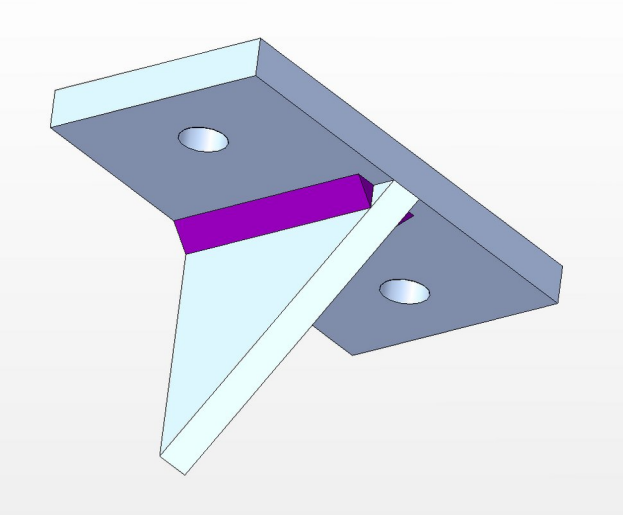

Make the four of these subassemblies

10.

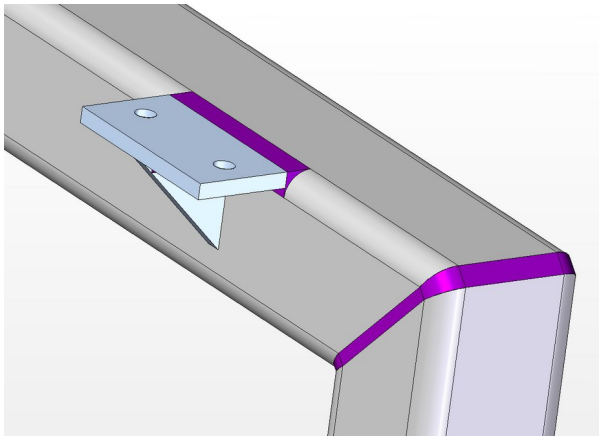

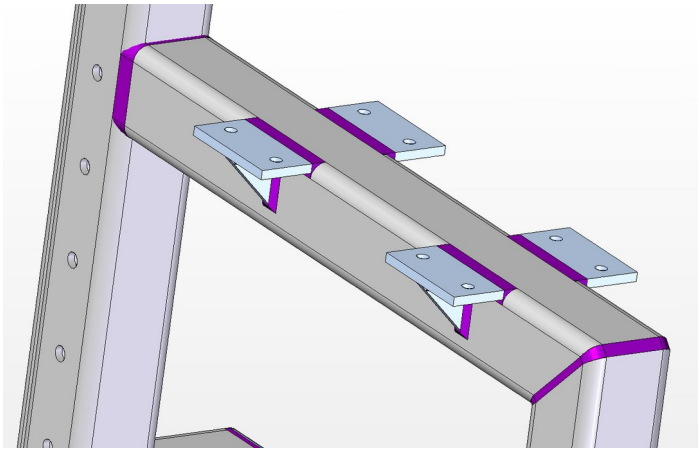

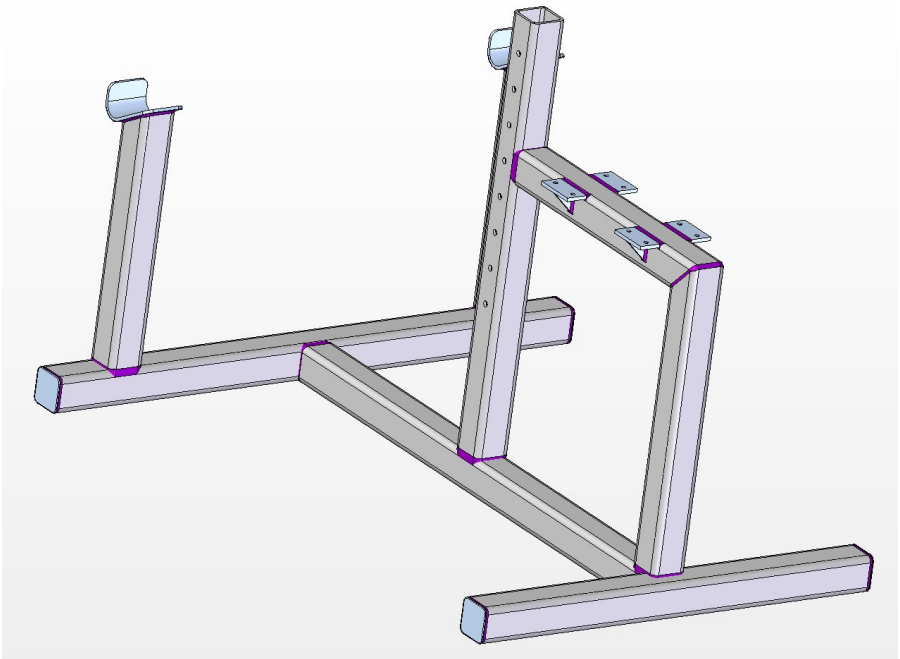

11.

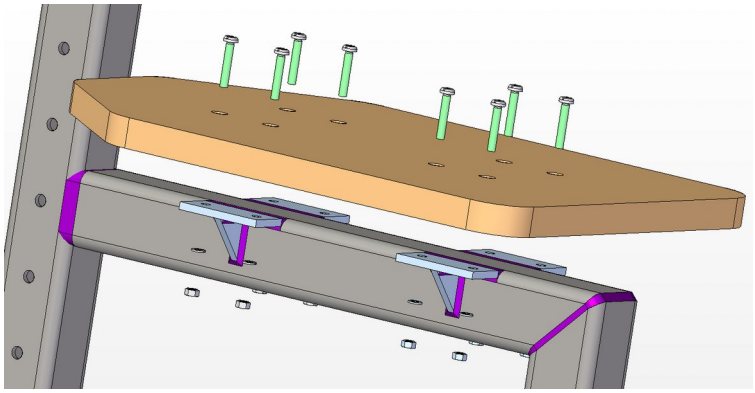

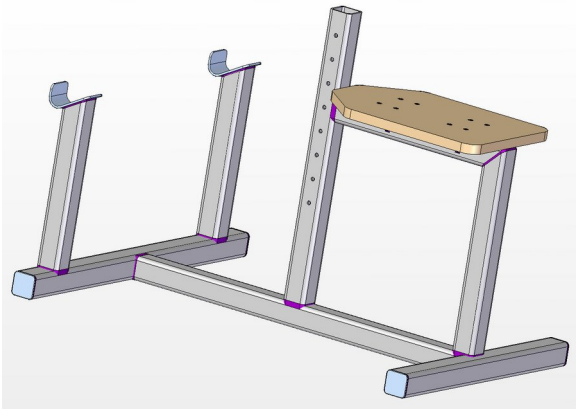

12.

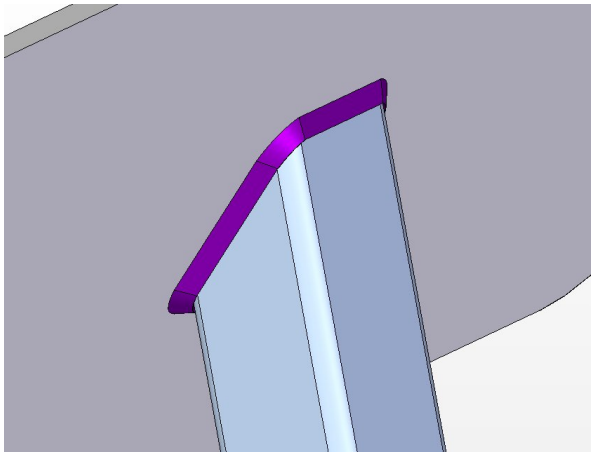

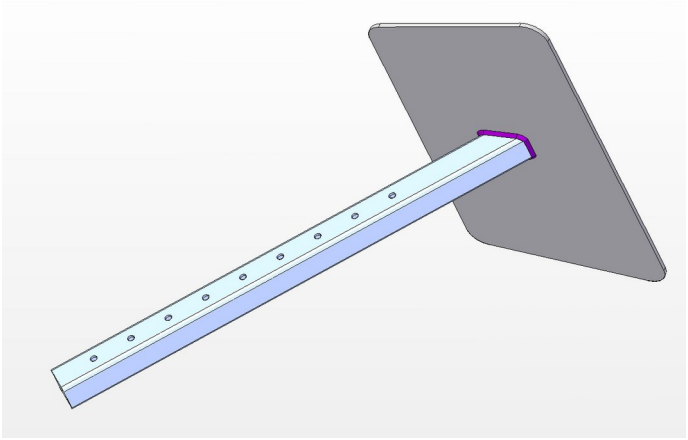

13.

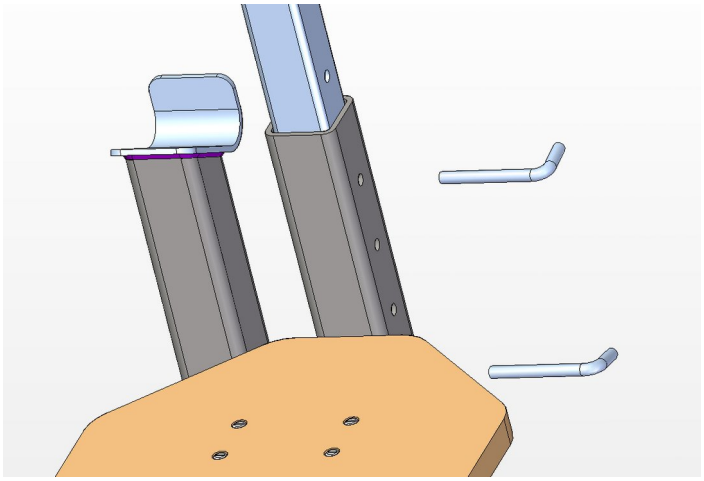

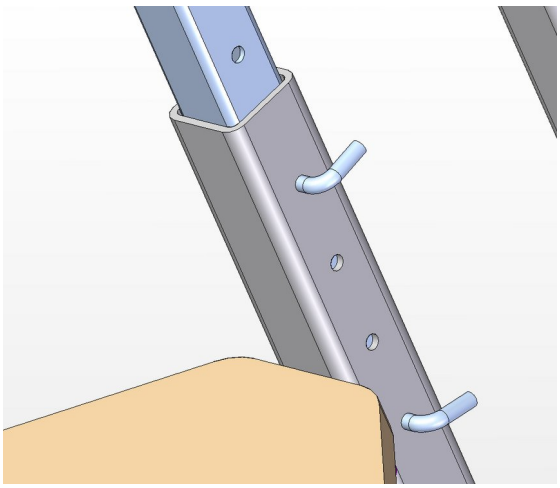

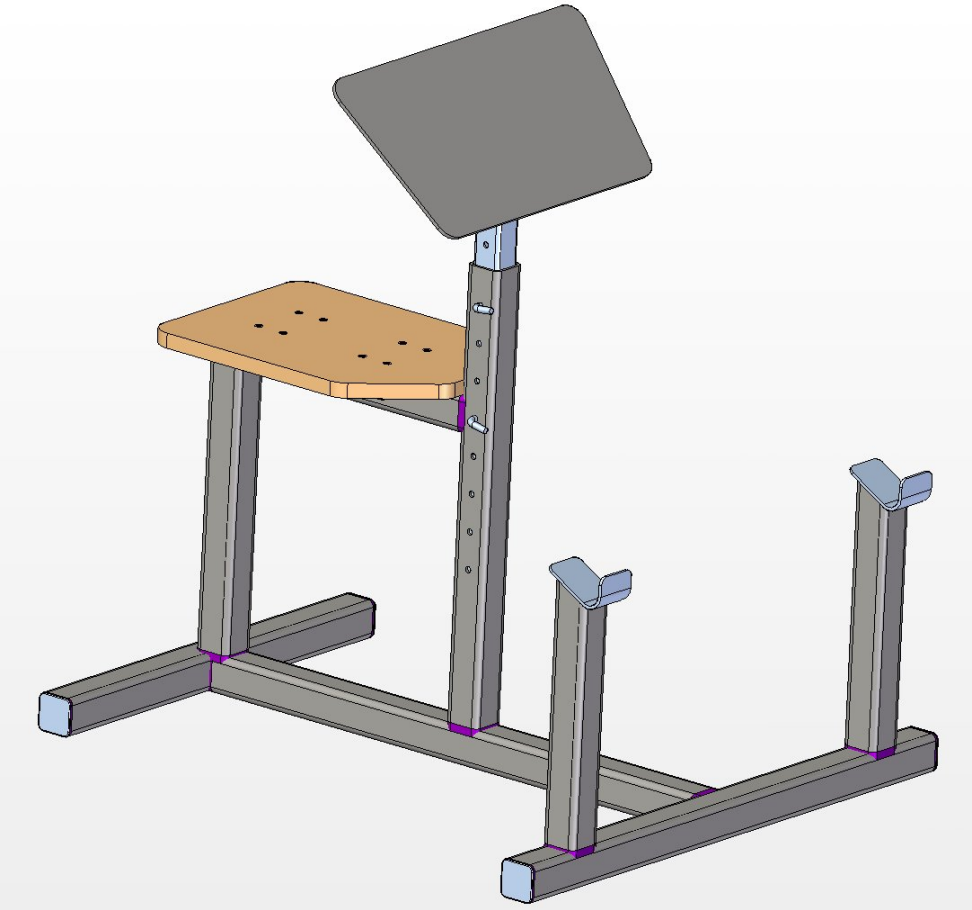

2. Weight Set Subassembly

1.

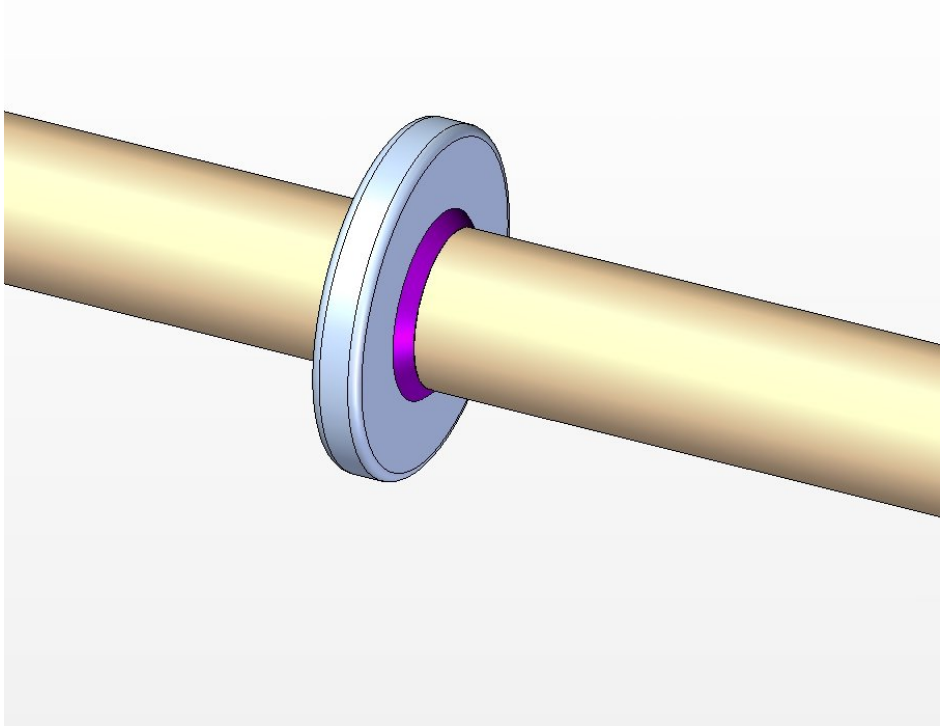

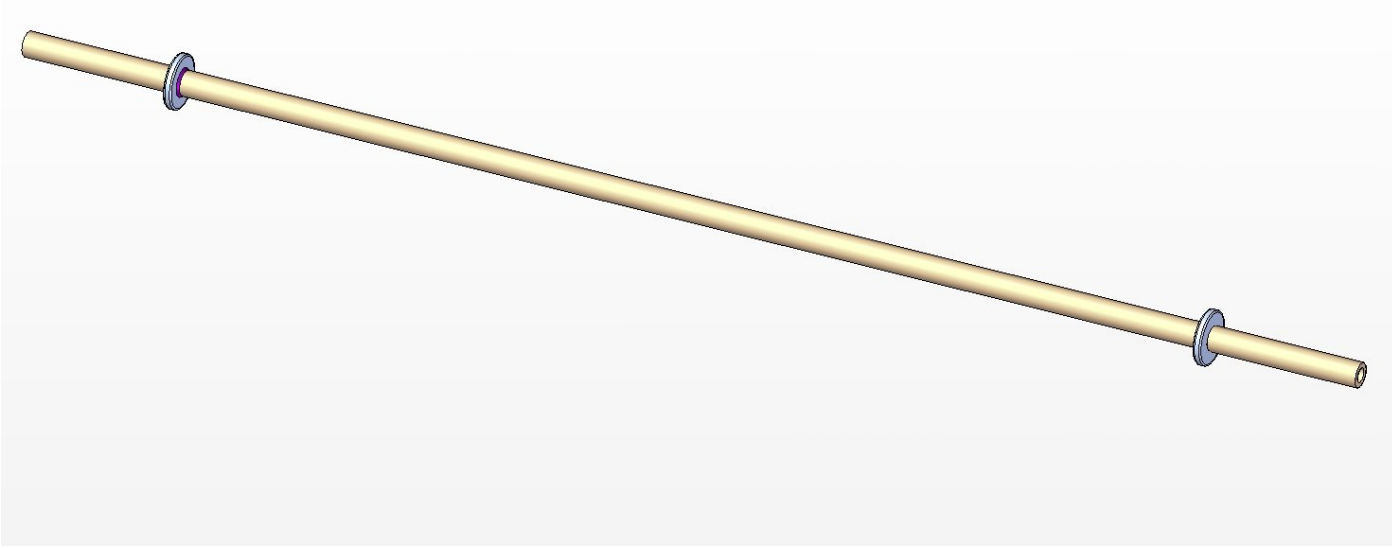

2.

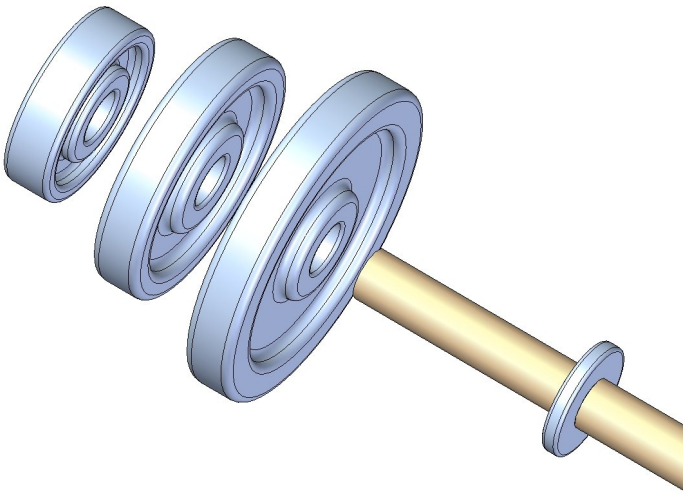

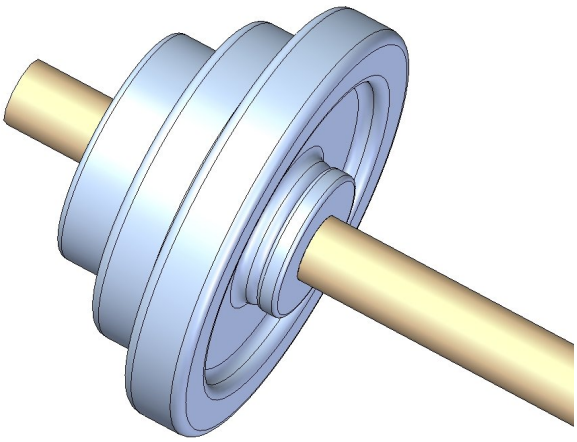
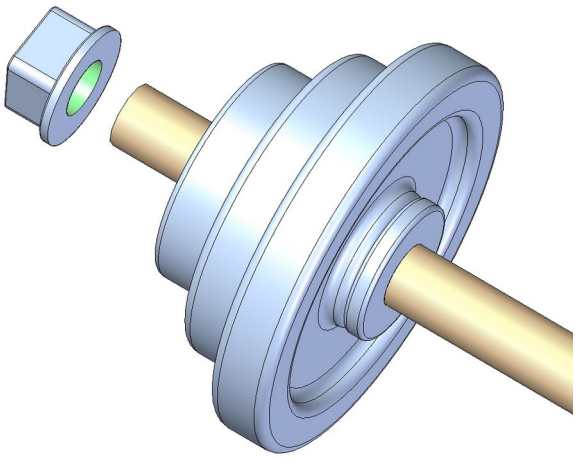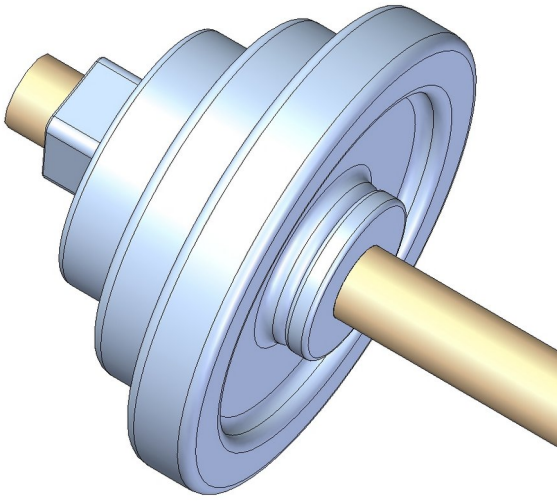
3.