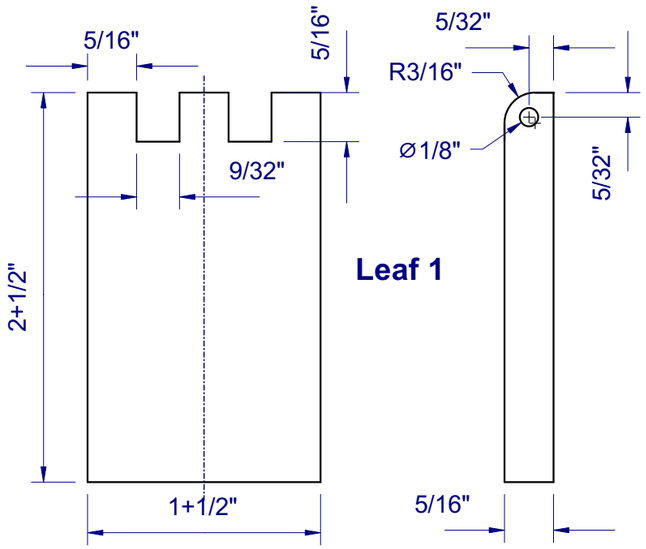
5/16"
5/16"
9/32"
2+1/2"
1+1/2"
5/32"
R3/16"
Ø1/8"
5/32"
5/16"
Leaf 1

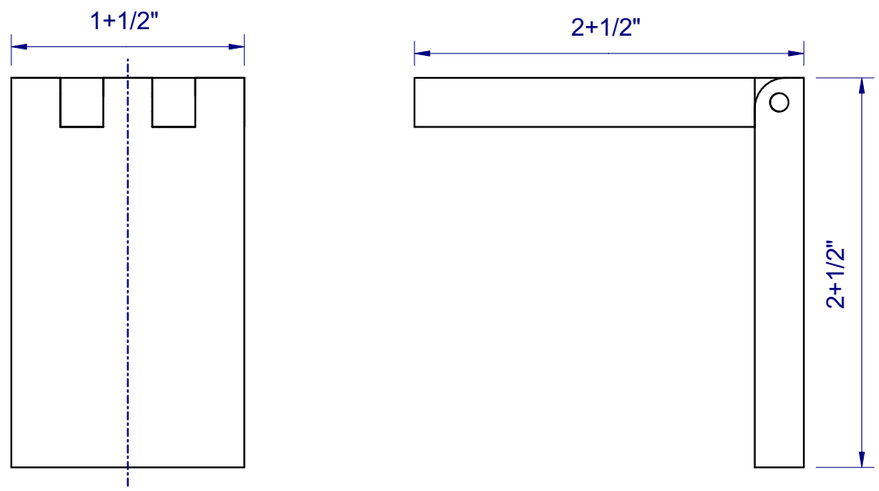
1+1/2"
2+1/2"
2+1/2"

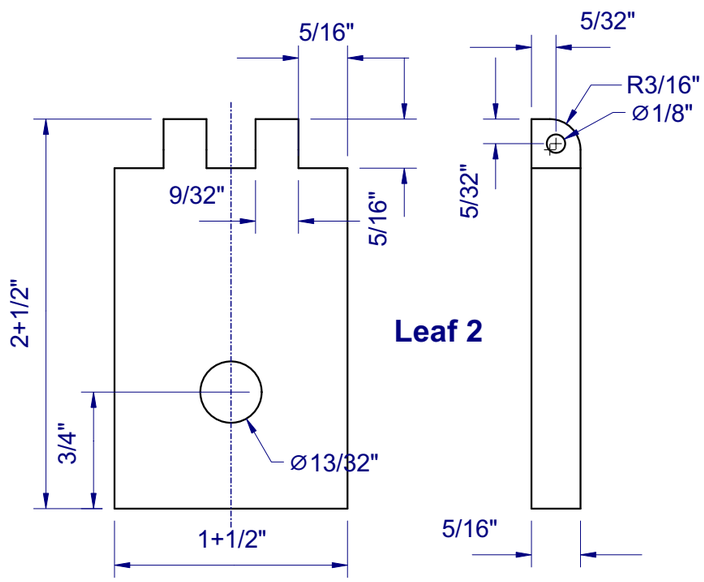
5/16"
5/32"
R3/16"
Ø1/8"
9/32"
5/16"
5/32"
2+1/2"
Leaf 2
3/4"
Ø13/32"
1+1/2"
5/16"

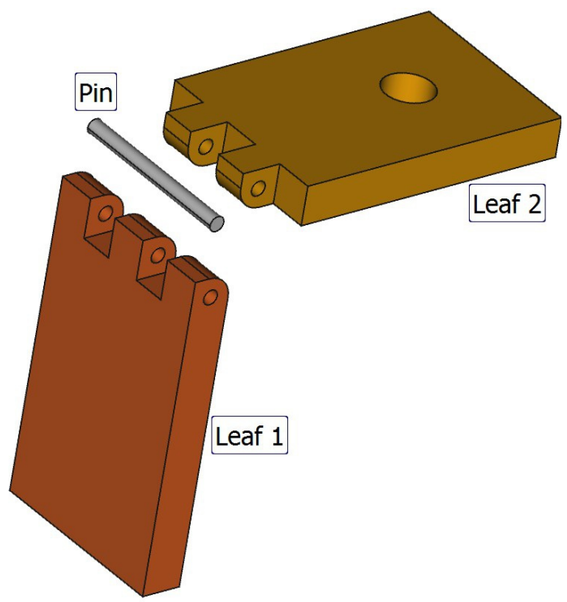
Pin
Leaf 2
Leaf 1

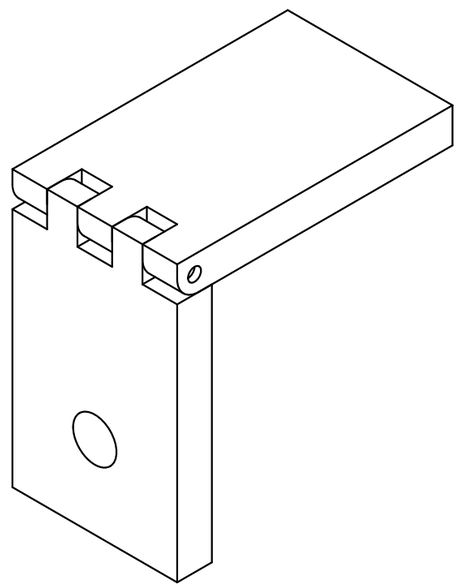

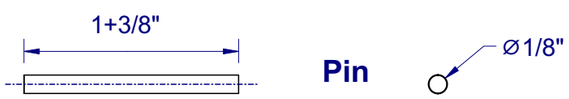
1+3/8"
Pin
Ø1/8"