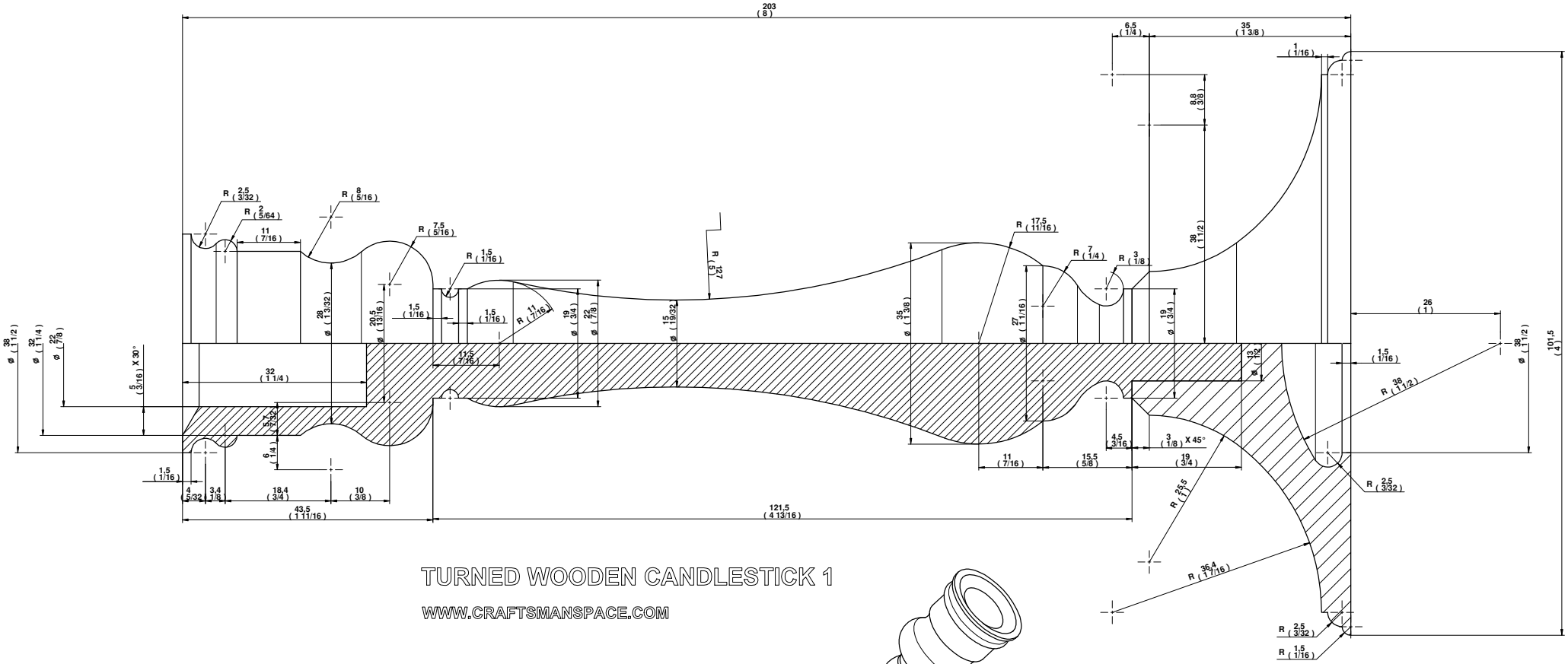

TURNED WOODEN CANDLESTICK 1
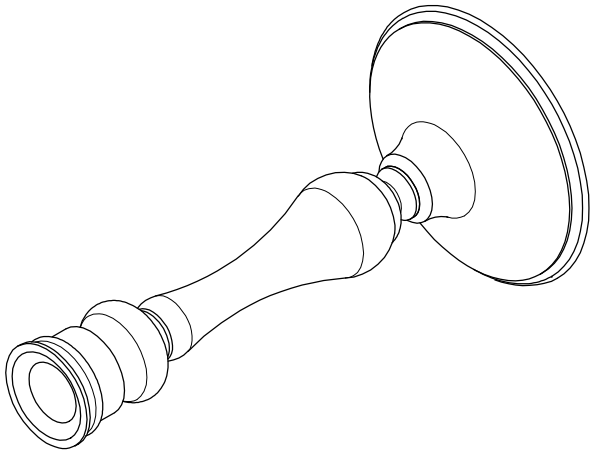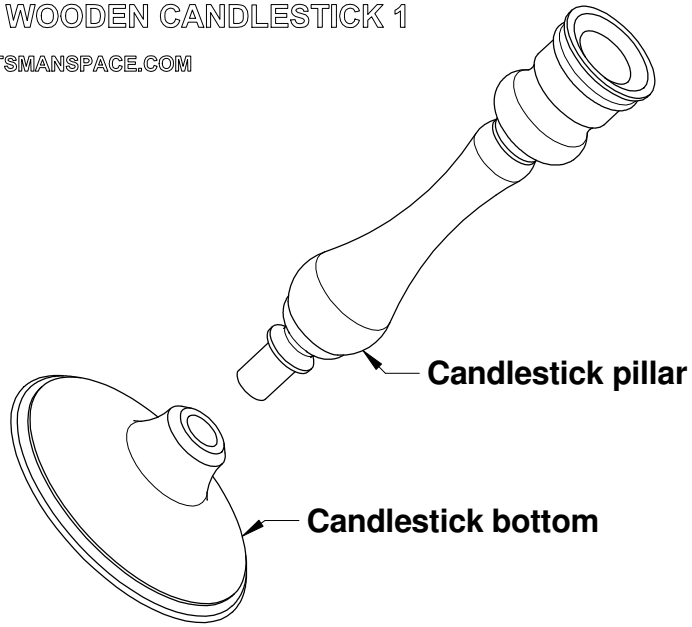
WWW.CRAFTSMANSPACE.COM